Parker Heavy Duty Hydraulic Cylinders

Series 2H

Exclusive with the Parker Stepped Cushion for increased performance and productivity

- **Faster cycle time**
- **Reduced hydraulic shock**
- **Reduced machine noise**
- **Lower machine maintenance**

B

- **Heavy Duty Service – Industrial Tie-Rod Construction**
- **Nominal Pressure – 3000 PSI**
- **Standard Bore Sizes – 1-1/2" through 6"**
- **Piston Rod Diameters – 5/8" through 4"**
- **18 Standard Mounting Styles**

For Cylinder Division Plant Locations – See Page II.

Parker Cylinder

The heavy-duty hydraulic cylinder with features only Parker can promise – and deliver!

Series 2H cylinders keep on performing like you expect from Parker — producing more power per pound, more power per dollar — over millions of trouble-free cycles. Everything you need for reliable 3,000 psi performance. Patented “Jewel” rod gland for longer life and lower operating costs. Chrome-plated, case hardened piston rods. Rod end studs of high yield-strength steel, with rolled threads for added strength. Tie rods with rolled threads and steel nuts. Floating cushions with float-check action and positive metal-to-metal seal. And every Parker cylinder is *individually* tested before it leaves our plant.

For additional information – call your local Parker Cylinder Distributor.

Series 2H
Heavy Duty Hydraulic Cylinders

Standard Specifications

- Heavy Duty Service – NFPA specifications and ANSI B93.15-1981 mounting dimension standards
- Standard Construction – Square Head – Tie Rod Design
- Nominal Pressure – 3000 P.S.I.*
- Standard Fluid – Hydraulic Oil
- Standard Temperature – -10 deg F to +165 deg F**
- Bore Sizes – 1½" through 6" (Larger sizes available)

In line with our policy of continuing product improvement, specifications in this catalog are subject to change.

- Piston Rod Diameter – ⅝" through 4"
- Mounting Styles – 18 standard styles at various application ratings
- Strokes – Available in any practical stroke length
- Cushions – Optional at either end or both ends of stroke. "Float Check" at cap end.
- Rod Ends – Three Standard Choices – Specials to Order

*If hydraulic operating pressure exceeds 3000 P.S.I., send application data for engineering evaluation and recommendation. See section C, page 84 for actual design factors.

** See section C, page 83 for higher temperature service.

Note: Series 2H Hydraulic Cylinders fully meet N.F.P.A. Standards and ANSI Standard B93.15-1981 for Mounting Dimensions for Square Head Industrial Fluid Power Cylinders.

Available Mounting Styles

Tie Rods Extended Head End

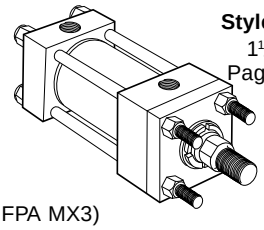

Style TB
1½-6"
Page 44
(NFPA MX3)

Tie Rods Extended Cap End

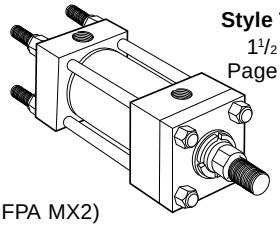

Style TC
1½-6"
Page 44
(NFPA MX2)

Tie Rods Extended Both Ends

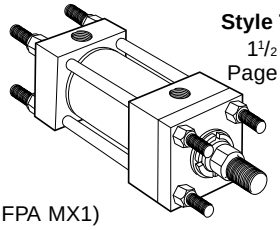

Style TD
1½-6"
Page 44
(NFPA MX1)

Head Rectangular Flange

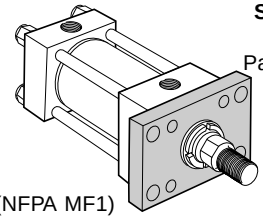

Style J
1½-6"
Page 46
(NFPA MF1)

Head Square Flange

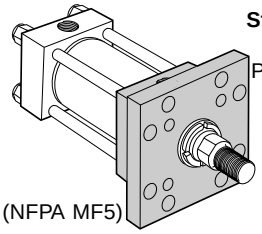

Style JB
1½-6"
Page 46
(NFPA MF5)

Head Rectangular

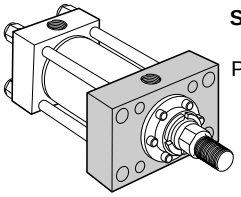

Style JJ
1½-6"
Page 46
(NFPA ME5)

Cap Rectangular Flange

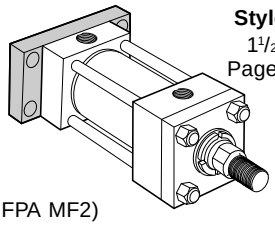

Style H
1½-6"
Page 48
(NFPA MF2)

Cap Square Flange

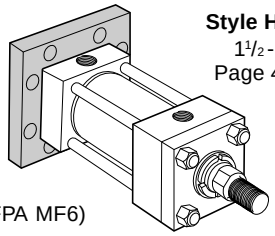

Style HB
1½-6"
Page 48
(NFPA MF6)

Cap Rectangular

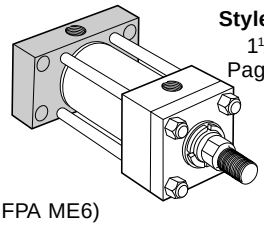

Style HH
1½-6"
Page 48
(NFPA ME6)

Side Lug

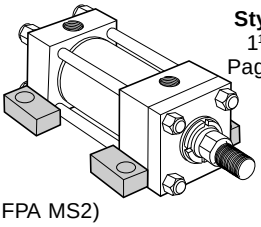

Style C
1½-6"
Page 50
(NFPA MS2)

Centerline Lugs

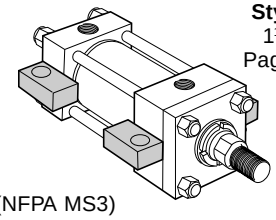

Style E
1½-6"
Page 50
(NFPA MS3)

Side Tapped

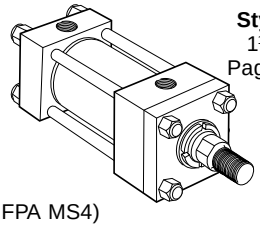

Style F
1½-6"
Page 50
(NFPA MS4)

Side End Angles

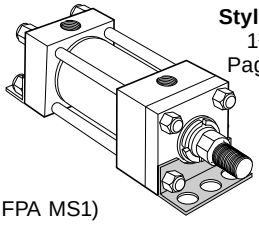

Style CB
1½-6"
Page 52
(NFPA MS1)

Side End Lugs

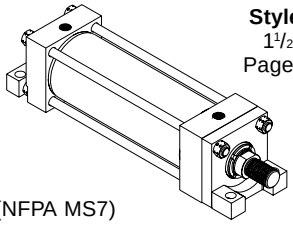

Style G
1½-6"
Page 52
(NFPA MS7)

Cap Fixed Clevis

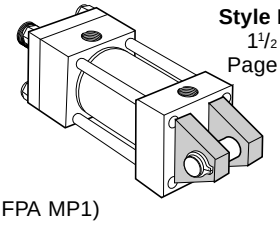

Style BB
1½-6"
Page 52
(NFPA MP1)

Head Trunnion

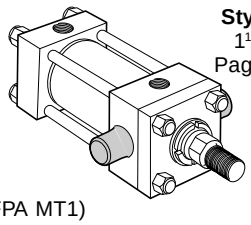

Style D
1½-6"
Page 54
(NFPA MT1)

Cap Trunnion

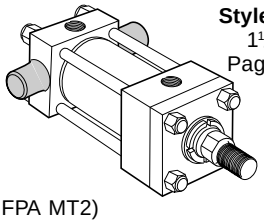

Style DB
1½-6"
Page 54
(NFPA MT2)

Intermediate Fixed Trunnion

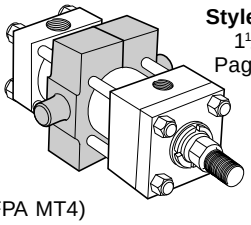

Style DD
1½-6"
Page 54
(NFPA MT4)

Spherical Bearing

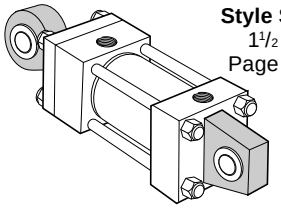

Style SB
1½-6"
Page 56

Double Rod Cylinders

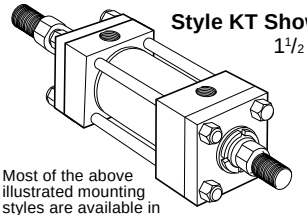

Style KT Shown
1½-6"

Most of the above illustrated mounting styles are available in double rod cylinders. See Catalog Page 58.

For Cylinder Division Plant Locations – See Page II.

The inside story on why series 2H is your best choice in heavy duty hydraulic cylinders

Steel Head – Bored and grooved to provide concentricity for mating parts.

Ports – S.A.E. "O" ring ports are standard.

End Seals – Pressure-actuated cylinder body-to-head and cap "O" rings.

Primary Seal – New TS-2000 Rod Seal is a proven leakproof design – completely self-compensating and self-relieving to withstand variations and conform to mechanical deflection that may occur.

Piston Rod Stud – Furnished on 2" diameter rods and smaller when standard style #4 rod end threads are required or on $1^3/_8$" diameter rods and smaller when style #8 threads are required. Also available in 2 times the catalog "A" dimension length. Studs have rolled threads and are made from high strength steel. Anaerobic adhesive is used to permanently lock the stud to the piston rod.

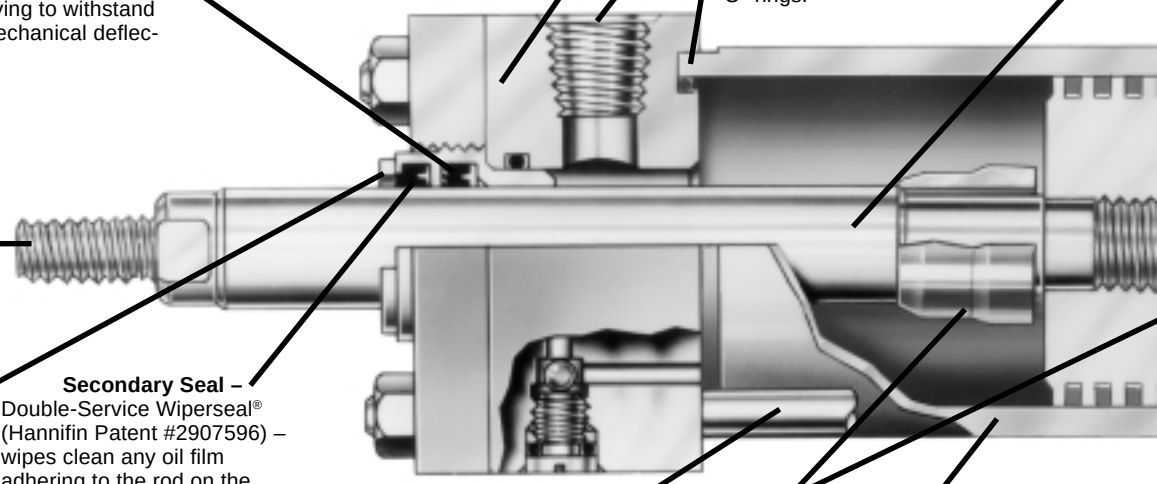

"Jewel" Rod Gland Assembly – Externally removable without cylinder disassembly. Long bearing surface is inboard of the seals, assuring positive lubrication from within the cylinder. An "O" ring is used as a seal between gland and head, and also serves as a prevailing torque-type lock.

Secondary Seal – Double-Service Wiperseal® (Hannifin Patent #2907596) – wipes clean any oil film adhering to the rod on the extend stroke and cleans the rod on the return stroke.

Stepped Cushions

Sleeve Design | Spear Design

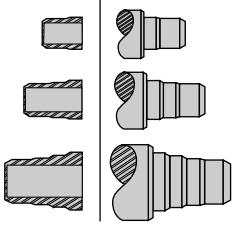

High Strength Tie Rods – Made from 100,000 psi minimum yield steel with rolled threads for added strength.

The Cylinder Body – Heavy-wall steel tubing, honed to a micro finish bore.

Adjustable Floating Stepped Cushions – For maximum performance – economical and flexible for even the most demanding applications – provides superior performance in reducing shock. Cushions are optional and can be supplied at head end, cap end, or both ends without change in envelope or mounting dimensions.

Parker's New, Exclusive
Stepped floating cushions combine the best features of known cushion technology.

Deceleration devices or built-in "cushions" are optional and can be supplied at head end, cap end, or both ends without change in envelope or mounting dimensions. Parker cylinder cushions are a stepped design and combine the best features of known cushion technology.

Standard straight or tapered cushions have been used in industrial cylinders over a very broad range of applications. Parker research has found that both designs have their limitations.

As a result, Parker has taken a new approach in cushioning of industrial hydraulic cylinders and for specific load and velocity conditions have been able to obtain deceleration curves that come very close to the ideal. The success lies in a stepped sleeve or spear concept where the steps are calculated to approximate theoretical orifice areas curves.

In the cushion performance chart, pressure traces show the results of typical orifice flow conditions. Tests of a three-step sleeve or spear show three pressure pulses coinciding with the steps. The deceleration cushion plunger curves shape comes very close to being theoretical, with the exception of the last $^1/_2$ inch of travel. This is a constant shape in order to have some flexibility in application. The stepped cushion design shows reduced pressure peaks for most load and speed conditions, with comparable reduction of objectionable stopping forces being transmitted to the load and the support structure.

All Parker Hannifin cushions are adjustable.

The Series 2H cylinder design incorporates the longest cushion sleeve and cushion spear that can be provided in the standard envelope without decreasing the rod bearing and piston bearing strengths.

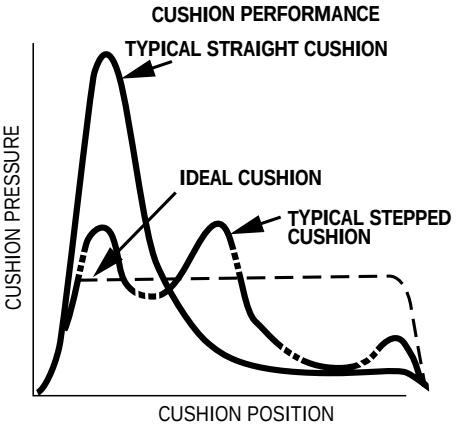

(1) When a cushion is specified at the head end:

a. A self-centering stepped sleeve is furnished on the piston rod assembly.

b. A needle valve is provided that is flush with the side of the

For additional information – call your local Parker Cylinder Distributor.

Piston Rod – Medium carbon steel, induction case-hardened to 54 R_c, hard chrome-plated and polished to 10 RMS finish. Piston rods are made from 90,000 to 100,000 psi minimum yield material in $^5/_8$" through 4" diameters. Larger diameters vary between 57,000 and 90,000 psi minimum material, depending on rod diameter. The piston thread equals the catalog style #4 rod end thread for each rod diameter to assure proper piston-to-rod thread strength. Two wrench flats are provided for rod end attachment.

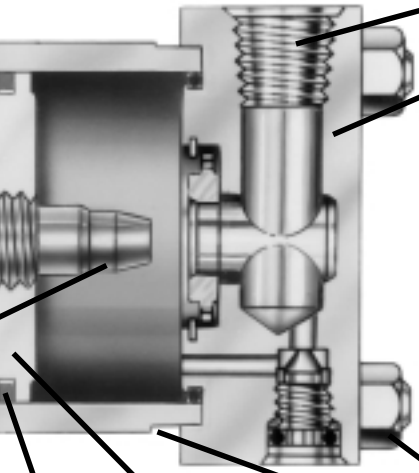

Ports – S.A.E. "O" ring ports are standard.

Steel Cap – Bored and grooved to provide concentricity for mating parts.

Optional Ports

Ports – N.P.T.F. ports are optional at no extra charge. Oversize N.P.T.F. and S.A.E. ports are available at extra charge.

Seals – Buna-N (Nitrile) seals are standard.

Viton Seals – Optional at extra charge.

Alloy Steel Tie Rod Nuts

Align-A-Groove – (Patent #3043639) – A $^3/_{16}$" wide surface machined at each end of the cylinder body. Makes precise mounting quick and easy.

One-Piece Fine Grained Cast Iron Piston – The wide piston surface contacting cylinder bore reduces bearing loads, and a long thread engagement with rod provides greater shock absorption. Anaerobic adhesive is used to permanently lock and seal the piston to the rod.

Step Cut Iron Piston Rings are standard.

The exclusive "Jewel" gland gives you longer cylinder life, better performance and lower costs.

An extra-long inboard bearing surface insures lubrication from within the cylinder. Outboard of the bearing surface are two leakproof seals – The TS-2000 and Wiperseal. The serrated TS-2000 (primary seal) is completely self-compensating and self-relieving. It adjusts to mechanical deflections or any pressure variation from near-zero to rated operating pressure. The result is positive, no-leak sealing – regardless of conditions.

The Wiperseal does double duty. On the advance stroke, it acts as a secondary pressure seal. On the return, it wipes away any dirt on the rod. This means less wear on bearing surfaces and internal parts. Longer life for working parts. And, less loss of fluid. Plus, you can replace a "Jewel" gland without removing the tie rods or the retainer. Just a few twists with a spanner wrench does the job.

Optional Pistons

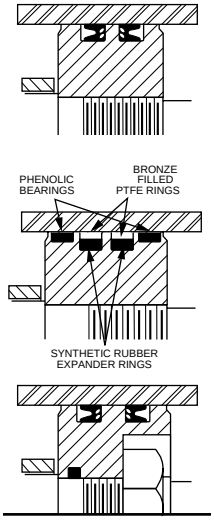

Lipseal® Piston – Optional at no extra charge. Zero leakage under static conditions for hydraulic pressures up to 3000 psi. Seals are self-compensating to conform to variations in pressure, mechanical deflection, and wear. Back-up washers prevent extrusion.

Hi Load Piston – Optional at extra charge. Includes wear rings and bronze-filled PTFE seals. Two wear rings serve as bearings which deform radially under side-loading, enabling the load to be spread over a larger area and reduce unit loading. Bronze-filled PTFE seals are designed for extrusion-free, leak-proof service and longer cylinder life than the lipseal type piston.

Nut Retained Piston – Optional at extra charge.

B

head even when wide open. It may be identified by the fact that it is socket-keyed. It is located on side number 2, in all mounting styles except D, DB, DD, JJ, HH and E. In these styles it is located on side number 3.

c. On 5" bore and larger cylinders (except for $2^1/_2$" bore with code 2 rod), a springless check valve is provided that is also flush with the side of the head and is mounted adjacent to the needle valve except on mounting style C, where it is mounted opposite the needle valve. It may be identified by the fact that it is slotted.

d. On $1^1/_2$" - 4" bore cylinders a slotted sleeve design is used in place of the check valve.

e. $1^1/_2$" - 2" bore cylinders use a cartridge style needle valve (see Figure A).

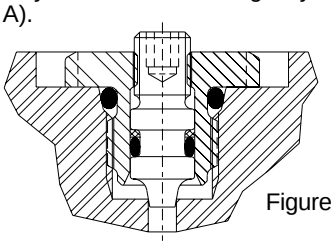

Figure A

(2) When a cushion is specified at the cap end:

a. A cushion stepped spear is provided on the piston rod.

b. A "float check" self-centering bushing is provided which incorporates a large flow check valve for fast "out-stroke" action.

c. A socket-keyed needle valve is provided that is flush with the side of the cap when wide open. It is located on side number 2 in all mounting styles except D, DB, DD, JJ, HH and E. In these styles it is located on side number 3.

Cushion Length

Cyl. Bore In.	Rod Dia. In.	Rod No.	Cushion Length – Inch	
			Head*	Cap
$1^1/_2$	$^5/_8$	1	$1^1/_8$	$1^3/_{16}$
	1	2	$1^1/_8$	$1^3/_{16}$
2	1	1	$1^1/_8$	$1^1/_8$
	$1^3/_8$	2	$1^1/_8$	$1^1/_8$
$2^1/_2$	1	1	$1^1/_8$	$1^1/_8$
	$1^3/_4$	2	$1^1/_8$	$1^1/_8$
$3^1/_4$	$1^3/_8$	1	$1^3/_8$	$1^5/_{16}$
	2	2	$1^1/_{16}$	$1^5/_{16}$
4	$1^3/_4$	1	$1^3/_8$	$1^1/_4$
	$2^1/_2$	2	$1^1/_{16}$	$1^1/_4$
5	2	1	$1^1/_{16}$	$1^1/_8$
	$3^1/_2$	2	$1^1/_{16}$	$1^1/_8$

Cyl. Bore In.	Rod Dia. In.	Rod No.	Cushion Length – Inch	
			Head*	Cap
6	$2^1/_2$	1	$1^5/_{16}$	$1^1/_2$
	4	2	$1^5/_{16}$	$1^1/_2$
7	3	1	$1^{13}/_{16}$	$1^{15}/_{16}$
	5	2	$1^{11}/_{16}$	$1^{15}/_{16}$
8	$3^1/_2$	1	$2^1/_{16}$	2
	$5^1/_2$	2	$1^{15}/_{16}$	2

*Head end cushions for rod diameters not listed have cushion lengths with the limits shown.

For Cylinder Division Plant Locations – See Page II.

Series 2H
Heavy Duty Hydraulic Cylinders

Tie Rods Extended Head End
Style TB
(NFPA Style MX3)

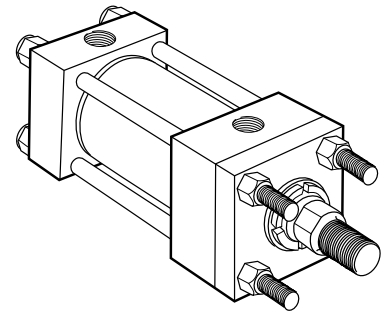

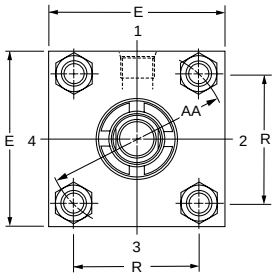

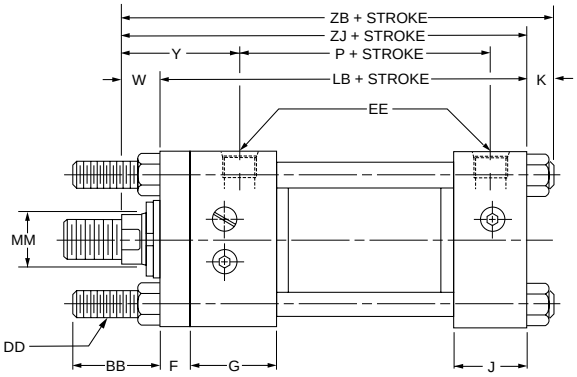

Tie Rods Extended Cap End
Style TC
(NFPA Style MX2)

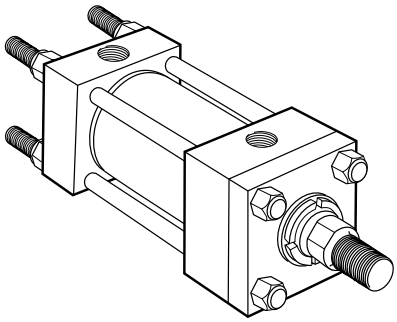

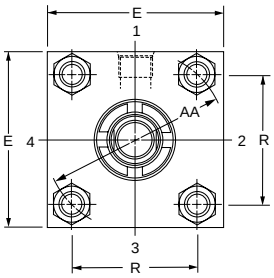

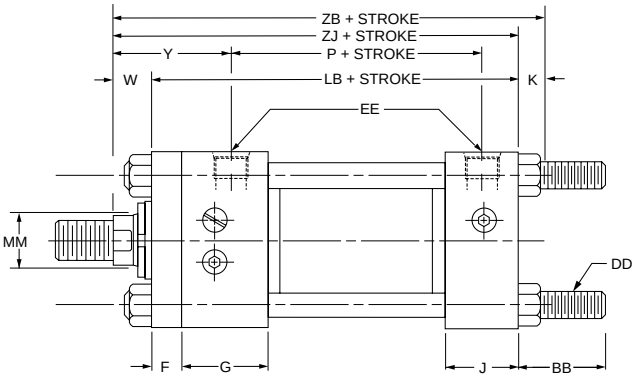

Tie Rods Extended Both Ends
Style TD
(NFPA Style MX1)

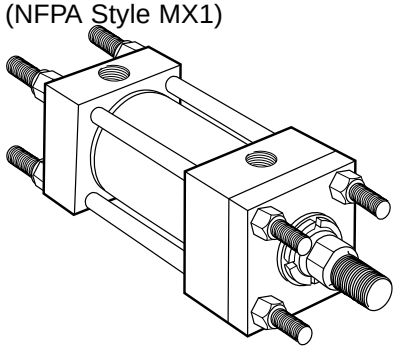

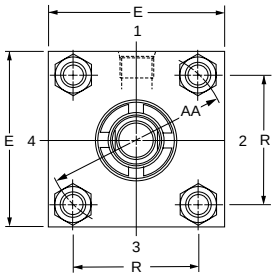

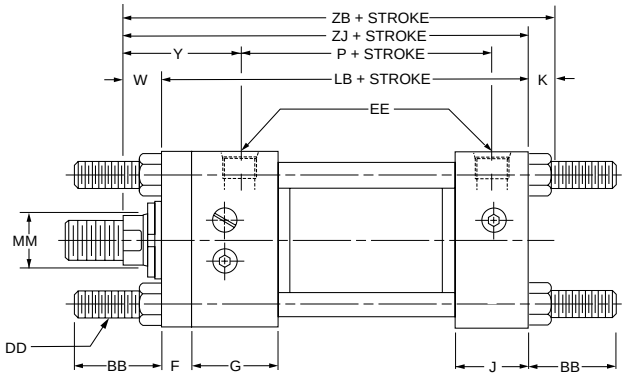

Basic Mounting (T) — NFPA MXO — Not shown is no tie rod extended and can be supplied upon request.

Rod End Dimensions — see table 2

Thread Style 4
(NFPA Style SM)
Small Male

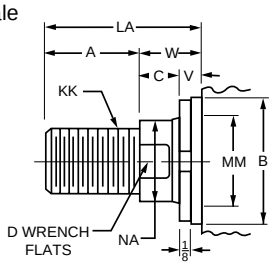

A high strength rod end stud is supplied on thread style 4 through 2" diameter rods and on thread style 8 through 1⅜" diameter rods. Larger sizes or special rod ends are cut threads. Style 4 rod ends are recommended where the workpiece is secured against the rod shoulder.

Thread Style 8
(NFPA Style IM)
Intermediate Male

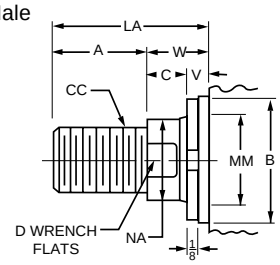

When the workpiece is not shouldered, style 4 rod ends are recommended through 2" piston rod diameters and style 8 rod ends are recommended on larger diameters. Use style 9 for applications where female rod end threads are required. If rod end is not specified, style 4 will be supplied.

Thread Style 9
(NFPA Style SF)
Small Female

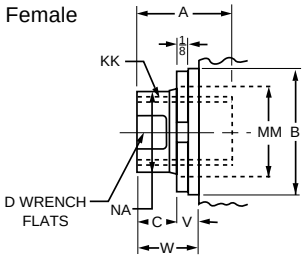

"Special" Thread Style 3

Special thread, extension, rod eye, blank, etc., are also available.

To order, specify "Style 3" and give desired dimensions for CC or KK, A and LA. If otherwise special, furnish dimensioned sketch.

For additional information – call your local Parker Cylinder Distributor.

Table 1—Envelope and Mounting Dimensions

Bore	AA	BB	DD	E	EE NPTF⊖	EE SAE★	F	G	J	K	R	Add Stroke LB	Add Stroke P
1½	2.3	1 3/8	3/8-24	2½	½	10	3/8	1 3/4	1½	3/8	1.63	5	2 7/8
2	2.9	1 13/16	½-20	3	½	10	5/8	1 3/4	1½	7/16	2.05	5¼	2 7/8
2½	3.6	1 13/16	½-20	3½	½	10	5/8	1 3/4	1½	7/16	2.55	5 3/8	3
3¼	4.6	2 5/16	5/8-18	4½	3/4	12	3/4	2	1 3/4	9/16	3.25	6¼	3½
4	5.4	2 5/16	5/8-18	5	3/4	12	7/8	2	1 3/4	9/16	3.82	6 5/8	3 3/4
5	7.0	3 3/16	7/8-14	6½	3/4	12	7/8	2	1 3/4	13/16	4.95	7 1/8	4¼
6	8.1	3 5/8	1-14	7½	1	16	1	2¼	2¼	7/8	5.73	8 3/8	4 7/8

★ SAE straight thread ports are standard and are indicated by port number.
⊖ NPTF ports are available at no extra charge.

B

Table 2—Rod Dimensions

Table 3 — Envelope and Mounting Dimensions

Bore	Rod No.	Rod Dia. MM	Thread Style 8 CC	Thread Style 4 & 9 KK	Rod Extensions and Pilot Dimensions A	B (+.000 -.002)	C	D	LA	NA	V	W	Y	Add Stroke ZB	Add Stroke ZJ
1½	1(Std.)	5/8	½-20	7/16-20	3/4	1.124	3/8	½	1 3/8	9/16	¼	5/8	2	6	5 5/8
	2	1	7/8-14	3/4-16	1 1/8	1.499	½	7/8	2 1/8	15/16	½	1	2 3/8	6 3/8	6
2	1(Std.)	1	7/8-14	3/4-16	1 1/8	1.499	½	7/8	1 7/8	15/16	¼	3/4	2 3/8	6 7/16	6
	2	1 3/8	1¼-12	1-14	1 5/8	1.999	5/8	1 1/8	2 5/8	1 5/16	3/8	1	2 5/8	6 11/16	6¼
2½	1(Std.)	1	7/8-14	3/4-16	1 1/8	1.499	½	7/8	1 7/8	15/16	¼	3/4	2 3/8	6 9/16	6 1/8
	2	1 3/4	1½-12	1¼-12	2	2.374	3/4	1½	3¼	1 11/16	½	1¼	2 7/8	7 1/16	6 5/8
	3	1 3/8	1¼-12	1-14	1 5/8	1.999	5/8	1 1/8	2 5/8	1 5/16	3/8	1	2 5/8	6 13/16	6 3/8
3¼	1(Std.)	1 3/8	1¼-12	1-14	1 5/8	1.999	5/8	1 1/8	2½	1 5/16	¼	7/8	2 3/4	7 11/16	7 1/8
	2	2	1 3/4-12	1½-12	2¼	2.624	7/8	1 11/16	3½	1 15/16	3/8	1¼	3 1/8	8 1/16	7½
	3	1 3/4	1½-12	1¼-12	2	2.374	3/4	1½	3 1/8	1 11/16	3/8	1 1/8	3	7 15/16	7 3/8
4	1(Std.)	1 3/4	1½-12	1¼-12	2	2.374	3/4	1½	3	1 11/16	¼	1	3	8 3/16	7 5/8
	2	2½	2¼-12	1 7/8-12	3	3.124	1	2 1/16	4 3/8	2 3/8	3/8	1 3/8	3 3/8	8 9/16	8
	3	2	1 3/4-12	1½-12	2¼	2.624	7/8	1 11/16	3 3/8	1 15/16	¼	1 1/8	3 1/8	8 5/16	7 3/4
5	1(Std.)	2	1 3/4-12	1½-12	2¼	2.624	7/8	1 11/16	3 3/8	1 15/16	¼	1 1/8	3 1/8	9 1/16	8¼
	2	3½	3¼-12	2½-12	3½	4.249	1	3	4 7/8	3 3/8	3/8	1 3/8	3 3/8	9 5/16	8½
	3	2½	2¼-12	1 7/8-12	3	3.124	1	2 1/16	4 3/8	2 3/8	3/8	1 3/8	3 3/8	9 5/16	8½
	4	3	2 3/4-12	2¼-12	3½	3.749	1	2 5/8	4 7/8	2 7/8	3/8	1 3/8	3 3/8	9 5/16	8½
6	1(Std.)	2½	2¼-12	1 7/8-12	3	3.124	1	2 1/16	4¼	2 3/8	¼	1¼	3½	10½	9 5/8
	2	4	3 3/4-12	3-12	4	4.749	1	3 3/8	5¼	3 7/8	¼	1¼	3½	10½	9 5/8
	3	3	2 3/4-12	2¼-12	3½	3.749	1	2 5/8	4 3/4	2 7/8	¼	1¼	3½	10½	9 5/8
	4	3½	3¼-12	2½-12	3½	4.249	1	3	4 3/4	3 3/8	¼	1¼	3½	10½	9 5/8

Series 2H
Heavy Duty Hydraulic Cylinders

Head Rectangular Flange Mounting Style J (NFPA Style MF1)

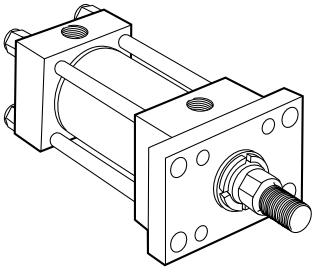

For Style "J" Mount

Bore Size	Max. PSI — Push* Rod Code 1	2	3	4	5
1½	2500	1500	—	—	—
2	2500	1500	—	—	—
2½	2500	1500	1900	—	—
3¼	2500	1500	2100	—	—
4	2500	1500	1800	—	—
5	2200	750	1650	1200	—
6	1800	750	1450	1100	—

*Maximum pressure rating — push application.

For pressures exceeding those shown use mounting styles JB or JJ.

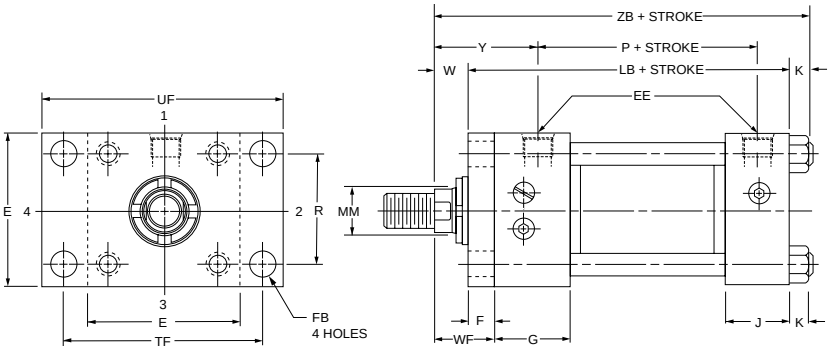

Head Square Flange Mounting Style JB (NFPA Style MF5)

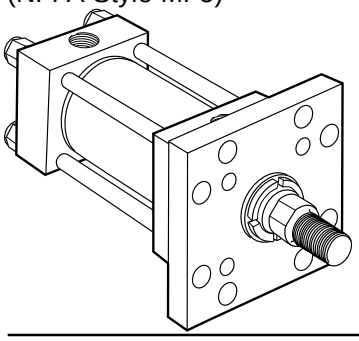

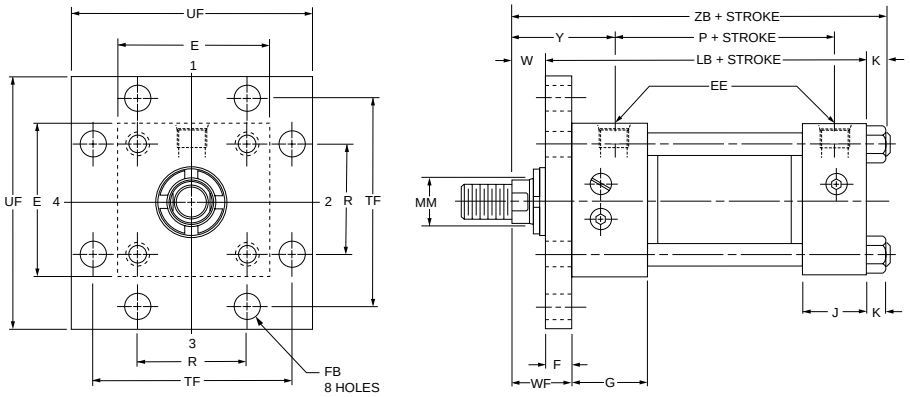

Head Rectangular Mounting Style JJ (NFPA Style ME5)

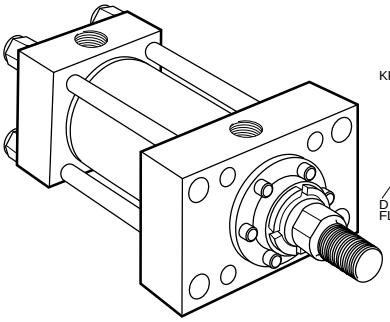

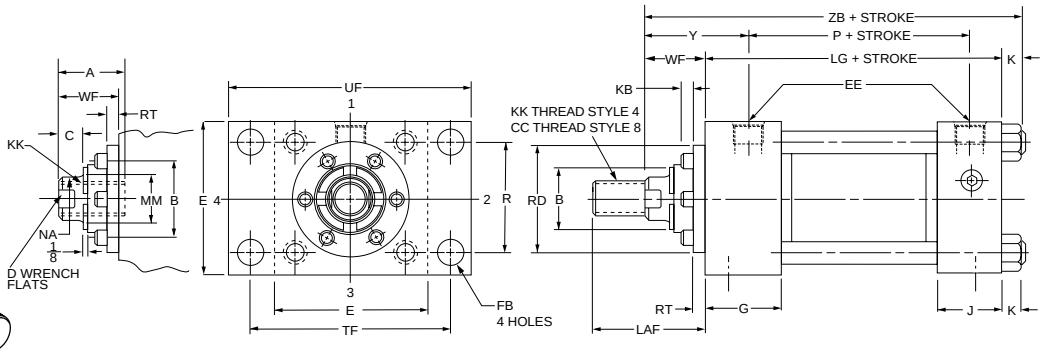

Rod End Dimensions — see table 2

Thread Style 4
(NFPA Style SM)
Small Male

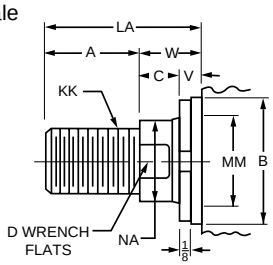

A high strength rod end stud is supplied on thread style 4 through 2" diameter rods and on thread style 8 through 1⅜" diameter rods. Larger sizes or special rod ends are cut threads. Style 4 rod ends are recommended where the workpiece is secured against the rod shoulder.

Thread Style 8
(NFPA Style IM)
Intermediate Male

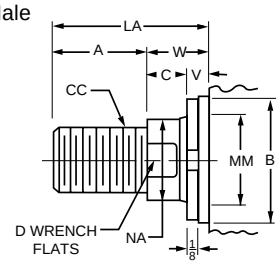

When the workpiece is not shouldered, style 4 rod ends are recommended through 2" piston rod diameters and style 8 rod ends are recommended on larger diameters. Use style 9 for applications where female rod end threads are required. If rod end is not specified, style 4 will be supplied.

Thread Style 9
(NFPA Style SF)
Small Female

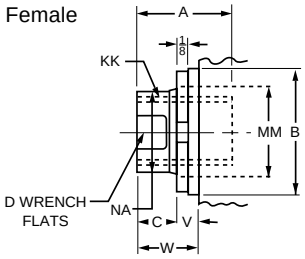

"Special" Thread Style 3

Special thread, extension, rod eye, blank, etc., are also available.

To order, specify "Style 3" and give desired dimensions for CC or KK, A and LA. If otherwise special, furnish dimensioned sketch.

For additional information – call your local Parker Cylinder Distributor.

Table 1—Envelope and Mounting Dimensions

Bore	E	EE NPTF⊖	EE SAE★	F	FB	G	J	K	R	TF	UF	Add Stroke LB	Add Stroke LG	Add Stroke P
1½	2½	½	10	⅜	7/16	1¾	1½	⅜	1.63	3 7/16	4¼	5	4⅝	2⅞
2	3	½	10	⅝	9/16	1¾	1½	7/16	2.05	4⅛	5⅛	5¼	4⅝	2⅞
2½	3½	½	10	⅝	9/16	1¾	1½	7/16	2.55	4⅝	5⅝	5⅜	4¾	3
3¼	4½	¾	12	¾	11/16	2	1¾	9/16	3.25	5⅞	7⅛	6¼	5½	3½
4	5	¾	12	⅞	11/16	2	1¾	9/16	3.82	6⅜	7⅝	6⅝	5¾	3¾
5	6½	¾	12	⅞	15/16	2	1¾	13/16	4.95	8 3/16	9¾	7⅛	6¼	4¼
6	7½	1	16	1	1 1/16	2¼	2¼	⅞	5.73	9 7/16	11¼	8⅜	7⅜	4⅞

★ SAE straight thread ports are standard and are indicated by port number.
⊖ NPTF ports are available at no extra charge.

B

Table 2—Rod Dimensions

Table 3 — Envelope and Mounting Dimensions

Bore	Rod No.	Rod Dia. MM	Thread Style 8 CC	Thread Style 4 & 9 KK	Rod Extensions and Pilot Dimensions A	+.000 -.002 B	C	D	KB	LA	LAF	NA	V	W	RD	RT	WF	Y	Add Stroke ZB
1½	1(Std.)	⅝	½-20	7/16-20	¾	1.124	⅜	½	0	1⅜	1¾	9/16	¼	⅝	2⅛	⅜	1	2	6
	2	1	⅞-14	¾-16	1⅛	1.499	½	⅞	0	2⅛	2½	15/16	½	1	2½	⅜	1⅜	2⅜	6⅜
2	1(Std.)	1	⅞-14	¾-16	1⅛	1.499	½	⅞	0	1⅞	2½	15/16	¼	¾	2½	⅜	1⅜	2⅜	6 7/16
	2	1⅜	1¼-12	1-14	1⅝	1.999	⅝	1⅛	¼	2⅝	3¼	1 5/16	⅜	1	3	⅜	1⅝	2⅝	6 11/16
2½	1(Std.)	1	⅞-14	¾-16	1⅛	1.499	½	⅞	0	1⅞	2½	15/16	¼	¾	2½	⅜	1⅜	2⅜	6 9/16
	2	1¾	1½-12	1¼-12	2	2.374	¾	1½	¼	3¼	3⅞	1 11/16	½	1¼	3½	⅜	1⅞	2⅞	7 1/16
	3	1⅜	1¼-12	1-14	1⅝	1.999	⅝	1⅛	¼	2⅝	3¼	1 5/16	⅜	1	3	⅜	1⅝	2⅝	6 13/16
3¼	1(Std.)	1⅜	1¼-12	1-14	1⅝	1.999	⅝	1⅛	¼	2½	3¼	1 5/16	¼	⅞	3	⅜	1⅝	2¾	7 11/16
	2	2	1¾-12	1½-12	2¼	2.624	⅞	1 11/16	⅛	3½	4¼	1 15/16	⅜	1¼	4	⅝	2	3⅛	8 1/16
	3	1¾	1½-12	1¼-12	2	2.374	¾	1½	¼	3⅛	3⅞	1 11/16	⅜	1⅛	3½	⅜	1⅞	3	7 15/16
4	1(Std.)	1¾	1½-12	1¼-12	2	2.374	¾	1½	¼	3	3⅞	1 11/16	¼	1	3½	⅜	1⅞	3	8 3/16
	2	2½	2¼-12	1⅞-12	3	3.124	1	2 1/16	¼	4⅜	5¼	2⅜	⅜	1⅜	4½	⅝	2¼	3⅜	8 9/16
	3	2	1¾-12	1½-12	2¼	2.624	⅞	1 11/16	⅛	3⅜	4¼	1 15/16	¼	1⅛	4	⅝	2	3⅛	8 5/16
5	1(Std.)	2	1¾-12	1½-12	2¼	2.624	⅞	1 11/16	⅛	3⅜	4¼	1 15/16	¼	1⅛	4	⅝	2	3⅛	9 1/16
	2	3½	3¼-12	2½-12	3½	4.249	1	3	¼	4⅞	5¾	3⅜	⅜	1⅜	5¾	⅝	2¼	3⅜	9 5/16
	3	2½	2¼-12	1⅞-12	3	3.124	1	2 1/16	¼	4⅜	5¼	2⅜	⅜	1⅜	4½	⅝	2¼	3⅜	9 5/16
	4	3	2¾-12	2¼-12	3½	3.749	1	2⅝	¼	4⅞	5¾	2⅞	⅜	1⅜	5¼	⅝	2¼	3⅜	9 5/16
6	1(Std.)	2½	2¼-12	1⅞-12	3	3.124	1	2 1/16	¼	4¼	5¼	2⅜	¼	1¼	4½	⅝	2¼	3½	10½
	2	4	3¾-12	3-12	4	4.749	1	3⅜	¼	5¼	6¼	3⅞	¼	1¼	6½	¾	2¼	3½	10½
	3	3	2¾-12	2¼-12	3½	3.749	1	2⅝	¼	4¾	5¾	2⅞	¼	1¼	5¼	⅝	2¼	3½	10½
	4	3½	3¼-12	2½-12	3½	4.249	1	3	¼	4¾	5¾	3⅜	¼	1¼	5¾	⅝	2¼	3½	10½

Series 2H
Heavy Duty Hydraulic Cylinders

Cap Rectangular Flange Mounting Style H (NFPA Style MF2)

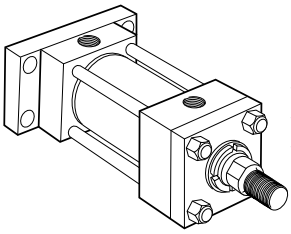

Bore Size	Max. PSI — Pull* Rod Code 1	2	3	4	5
1½	3000	3000	—	—	—
2	3000	3000	—	—	—
2½	3000	3000	3000	—	—
3¼	3000	3000	3000	—	—
4	3000	3000	3000	—	—
5	2000	3000	2500	2800	—
6	2000	3000	2500	2800	—

*Maximum pressure rating — pull application.

For pressures exceeding those shown use mounting styles HB or HH.

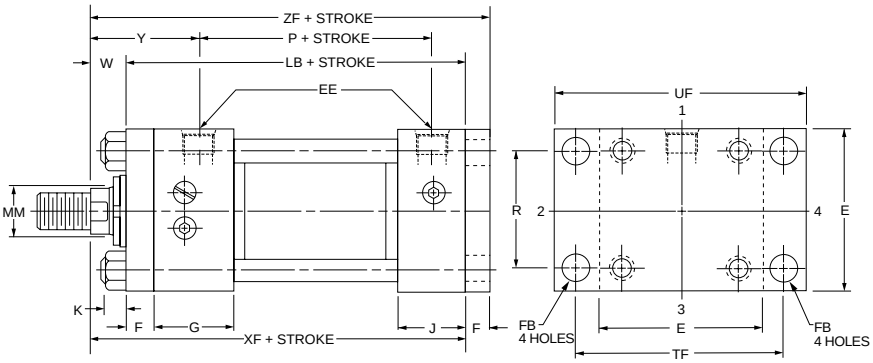

Cap Square Flange Mounting Style HB (NFPA Style MF6)

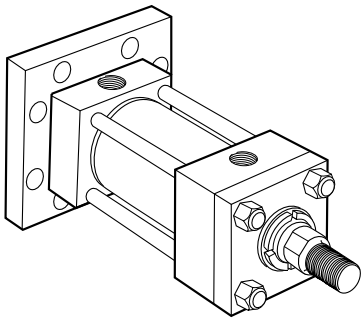

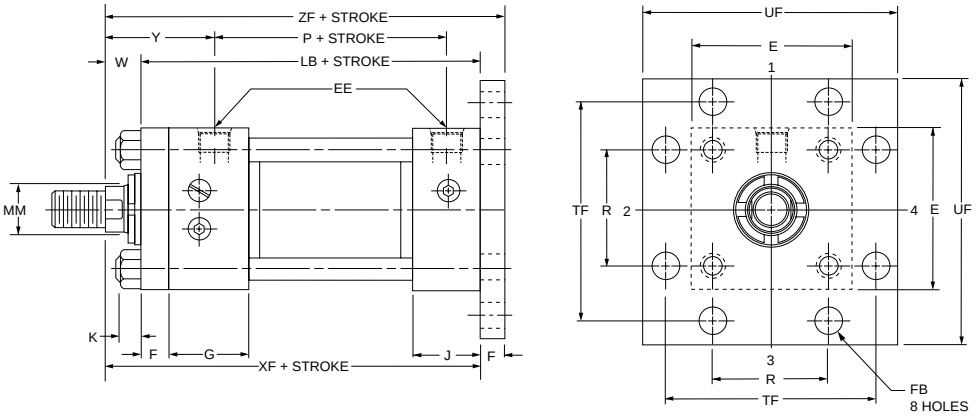

Cap Rectangular Mounting Style HH (NFPA Style ME6)

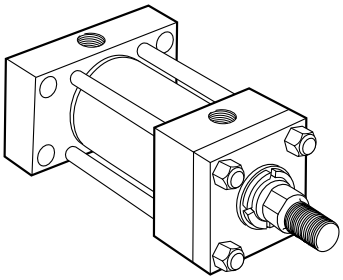

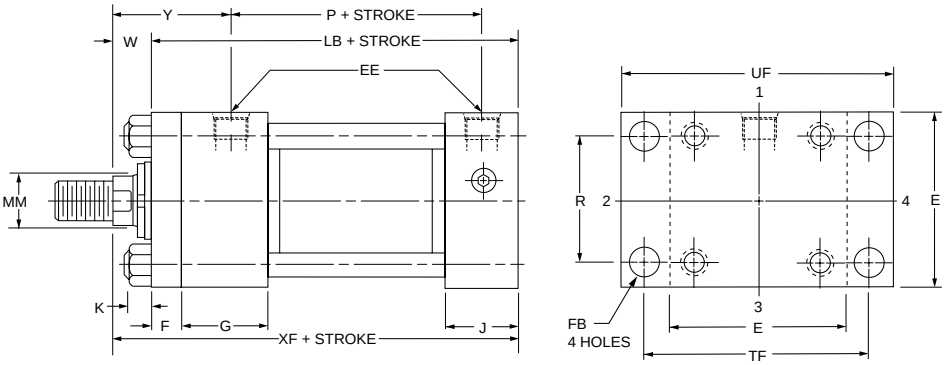

Rod End Dimensions — see table 2

Thread Style 4
(NFPA Style SM)
Small Male

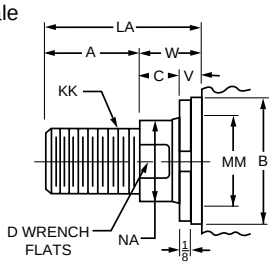

A high strength rod end stud is supplied on thread style 4 through 2" diameter rods and on thread style 8 through 1³/₈" diameter rods. Larger sizes or special rod ends are cut threads. Style 4 rod ends are recommended where the workpiece is secured against the rod shoulder.

Thread Style 8
(NFPA Style IM)
Intermediate Male

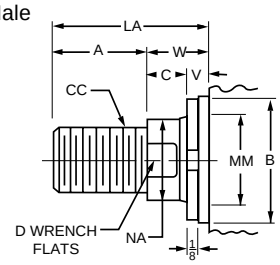

When the workpiece is not shouldered, style 4 rod ends are recommended through 2" piston rod diameters and style 8 rod ends are recommended on larger diameters. Use style 9 for applications where female rod end threads are required. If rod end is not specified, style 4 will be supplied.

Thread Style 9
(NFPA Style SF)
Small Female

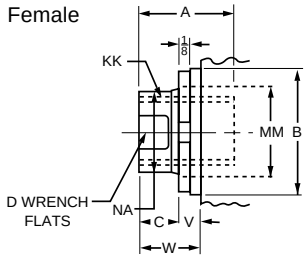

"Special" Thread Style 3

Special thread, extension, rod eye, blank, etc., are also available.

To order, specify "Style 3" and give desired dimensions for CC or KK, A and LA. If otherwise special, furnish dimensioned sketch.

For additional information – call your local Parker Cylinder Distributor.

Table 1—Envelope and Mounting Dimensions

Bore	E	EE NPTF⊖	EE SAE★	F	FB	G	J	K	R	TF	UF	Add Stroke LB	Add Stroke P
1½	2½	½	10	⅜	7/16	1¾	1½	⅜	1.63	3 7/16	4¼	5	2⅞
2	3	½	10	⅝	9/16	1¾	1½	7/16	2.05	4⅛	5⅛	5¼	2⅞
2½	3½	½	10	⅝	9/16	1¾	1½	7/16	2.55	4⅝	5⅝	5⅜	3
3¼	4½	¾	12	¾	11/16	2	1¾	9/16	3.25	5⅞	7⅛	6¼	3½
4	5	¾	12	⅞	11/16	2	1¾	9/16	3.82	6⅜	7⅝	6⅝	3¾
5	6½	¾	12	⅞	15/16	2	1¾	13/16	4.95	8 3/16	9¾	7⅛	4¼
6	7½	1	16	1	1 1/16	2¼	2¼	⅞	5.73	9 7/16	11¼	8⅜	4⅞

★ SAE straight thread ports are standard and are indicated by port number.
⊖ NPTF ports are available at no extra charge.

B

Table 2—Rod Dimensions

Bore	Rod No.	Rod Dia. MM	Thread Style 8 CC	Thread Style 4 & 9 KK	Rod Extensions and Pilot Dimensions A	+.000 -.002 B	C	D	LA	NA	V	W	WF	Y	Add Stroke XF	Add Stroke ZF
1½	1(Std.)	⅝	½-20	7/16-20	¾	1.124	⅜	½	1⅜	9/16	¼	⅝	1	2	5⅝	6
	2	1	⅞-14	¾-16	1⅛	1.499	½	⅞	2⅛	15/16	½	1	1⅜	2⅜	6	6⅜
2	1(Std.)	1	⅞-14	¾-16	1⅛	1.499	½	⅞	1⅞	15/16	¼	¾	1⅜	2⅜	6	6⅝
	2	1⅜	1¼-12	1-14	1⅝	1.999	⅝	1⅛	2⅝	1 5/16	⅜	1	1⅝	2⅝	6¼	6⅞
2½	1(Std.)	1	⅞-14	¾-16	1⅛	1.499	½	⅞	1⅞	15/16	¼	¾	1⅜	2⅜	6⅛	6¾
	2	1¾	1½-12	1¼-12	2	2.374	¾	1½	3¼	1 11/16	½	1¼	1⅞	2⅞	6⅝	7¼
	3	1⅜	1¼-12	1-14	1⅝	1.999	⅝	1⅛	2⅝	1 5/16	⅜	1	1⅝	2⅝	6⅜	7
3¼	1(Std.)	1⅜	1¼-12	1-14	1⅝	1.999	⅝	1⅛	2½	1 5/16	¼	⅞	1⅝	2¾	7⅛	7⅞
	2	2	1¾-12	1½-12	2¼	2.624	⅞	1 11/16	3½	1 15/16	⅜	1¼	2	3⅛	7½	8¼
	3	1¾	1½-12	1¼-12	2	2.374	¾	1½	3⅛	1 11/16	⅜	1⅛	1⅞	3	7⅜	8⅛
4	1(Std.)	1¾	1½-12	1¼-12	2	2.374	¾	1½	3	1 11/16	¼	1	1⅞	3	7⅝	8½
	2	2½	2¼-12	1⅞-12	3	3.124	1	2 1/16	4⅜	2⅜	⅜	1⅜	2¼	3⅜	8	8⅞
	3	2	1¾-12	1½-12	2¼	2.624	⅞	1 11/16	3⅜	1 15/16	¼	1⅛	2	3⅛	7¾	8⅝
5	1(Std.)	2	1¾-12	1½-12	2¼	2.624	⅞	1 11/16	3⅜	1 15/16	¼	1⅛	2	3⅛	8¼	9⅛
	2	3½	3¼-12	2½-12	3½	4.249	1	3	4⅞	3⅜	⅜	1⅜	2¼	3⅜	8½	9⅜
	3	2½	2¼-12	1⅞-12	3	3.124	1	2 1/16	4⅜	2⅜	⅜	1⅜	2¼	3⅜	8½	9⅜
	4	3	2¾-12	2¼-12	3½	3.749	1	2⅝	4⅞	2⅞	⅜	1⅜	2¼	3⅜	8½	9⅜
6	1(Std.)	2½	2¼-12	1⅞-12	3	3.124	1	2 1/16	4¼	2⅜	¼	1¼	2¼	3½	9⅝	10⅝
	2	4	3¾-12	3-12	4	4.749	1	3⅜	5¼	3⅞	¼	1¼	2¼	3½	9⅝	10⅝
	3	3	2¾-12	2¼-12	3½	3.749	1	2⅝	4¾	2⅞	¼	1¼	2¼	3½	9⅝	10⅝
	4	3½	3¼-12	2½-12	3½	4.249	1	3	4¾	3⅜	¼	1¼	2¼	3½	9⅝	10⅝

Table 3 — Envelope and Mounting Dimensions

Series 2H
Heavy Duty Hydraulic Cylinders

Side Lug Mountings
Style C
(NFPA Style MS2)

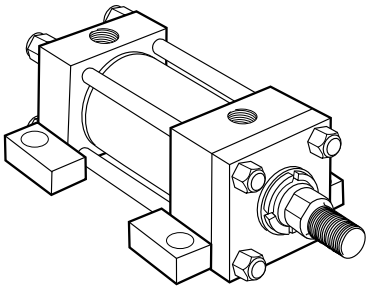

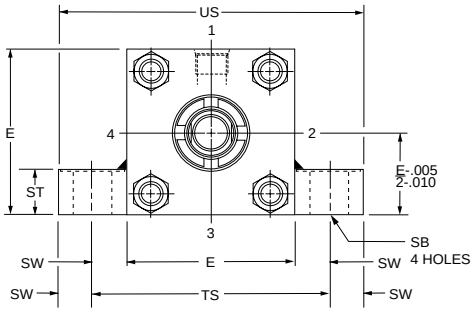

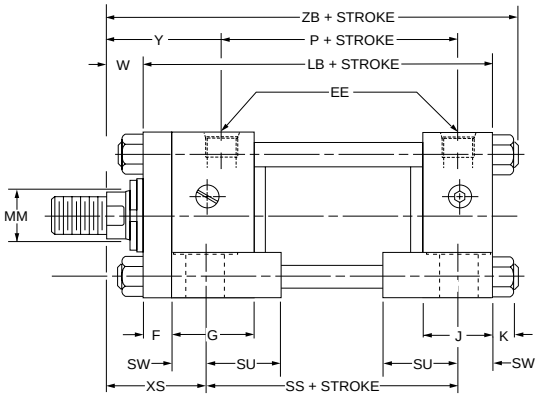

Centerline Lugs Mounting
Style E
(NFPA Style MS3)

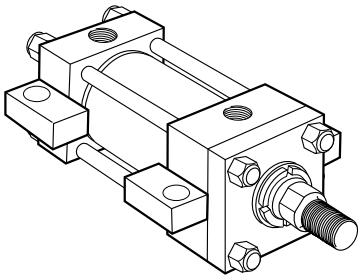

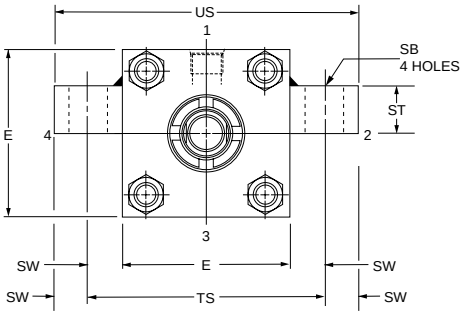

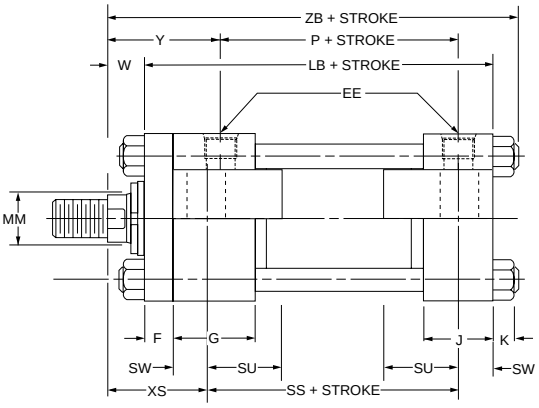

Side Tapped Mounting
Style F
(NFPA Style MS4)

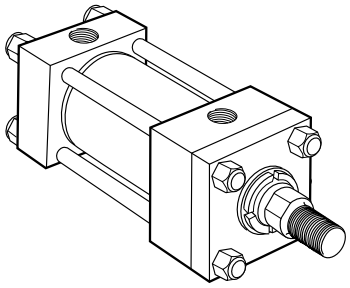

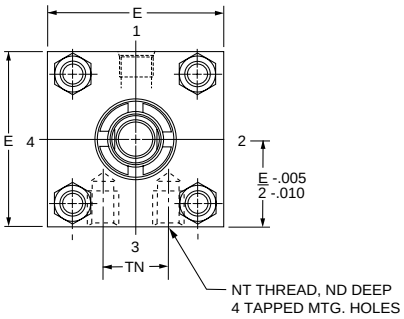

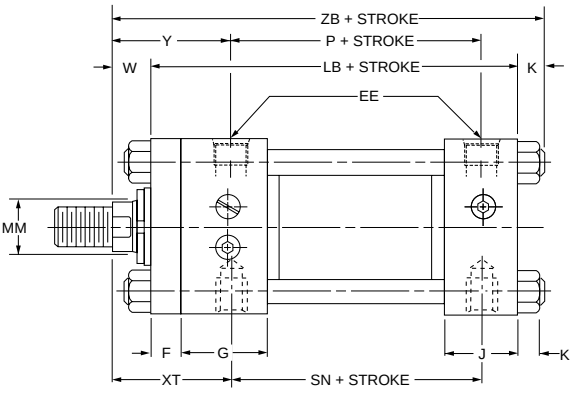

Rod End Dimensions — see table 2

Thread Style 4
(NFPA Style SM)
Small Male

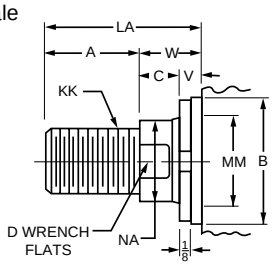

A high strength rod end stud is supplied on thread style 4 through 2" diameter rods and on thread style 8 through 1³/₈" diameter rods. Larger sizes or special rod ends are cut threads. Style 4 rod ends are recommended where the workpiece is secured against the rod shoulder.

Thread Style 8
(NFPA Style IM)
Intermediate Male

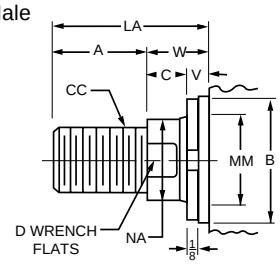

When the workpiece is not shouldered, style 4 rod ends are recommended through 2" piston rod diameters and style 8 rod ends are recommended on larger diameters. Use style 9 for applications where female rod end threads are required. If rod end is not specified, style 4 will be supplied.

Thread Style 9
(NFPA Style SF)
Small Female

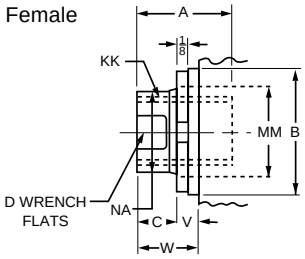

"Special" Thread Style 3

Special thread, extension, rod eye, blank, etc., are also available.

To order, specify "Style 3" and give desired dimensions for CC or KK, A and LA. If otherwise special, furnish dimensioned sketch.

For additional information – call your local Parker Cylinder Distributor.

Table 1—Envelope and Mounting Dimensions

Bore	E	EE NPTF⊖	EE SAE★	F	G	J	K	NT	SB*	ST	SU	SW	TN	TS	US	Add Stroke LB	Add Stroke P	Add Stroke SN	Add Stroke SS
1½	2½	½	10	⅜	1¾	1½	⅜	⅜-16	7/16	½	15/16	⅜	¾	3¼	4	5	2⅞	2⅞	3⅞
2	3	½	10	⅝	1¾	1½	7/16	½-13	9/16	¾	1¼	½	15/16	4	5	5¼	2⅞	2⅞	3⅝
2½	3½	½	10	⅝	1¾	1½	7/16	⅝-11	13/16	1	1 9/16	11/16	1 5/16	4⅞	6¼	5⅜	3	3	3⅜
3¼	4½	¾	12	¾	2	1¾	9/16	¾-10	13/16	1	1 9/16	11/16	1½	5⅞	7¼	6¼	3½	3½	4⅛
4	5	¾	12	⅞	2	1¾	9/16	1-8	1 1/16	1¼	2	⅞	2 1/16	6¾	8½	6⅝	3¾	3¾	4
5	6½	¾	12	⅞	2	1¾	13/16	1-8	1 1/16	1¼	2	⅞	2 15/16	8¼	10	7⅛	4¼	4¼	4½
6	7½	1	16	1	2¼	2¼	⅞	1¼-7	1 5/16	1½	2½	1⅛	3 5/16	9¾	12	8⅜	4⅞	5⅛	5⅛

★ SAE straight thread ports are standard and are indicated by port number.
⊖ NPTF ports are available at no extra charge.
* Upper surface spotfaced for socket head screws.

B

Table 2—Rod Dimensions

Bore	Rod No.	Rod Dia. MM	Thread Style 8 CC	Thread Style 4 & 9 KK	Rod Extensions and Pilot Dimensions A	+.000 -.002 B	C	D	LA	NA	V	W	ND	XS	XT	Y	Add Stroke ZB
1½	1(Std.)	⅝	½-20	7/16-20	¾	1.124	⅜	½	1⅜	9/16	¼	⅝	⅜	1⅜	2	2	6
	2	1	⅞-14	¾-16	1⅛	1.499	½	⅞	2⅛	15/16	½	1	⅜	1¾	2⅜	2⅜	6⅜
2	1(Std.)	1	⅞-14	¾-16	1⅛	1.499	½	⅞	1⅞	15/16	¼	¾	7/16	1⅞	2⅜	2⅜	6 7/16
	2	1⅜	1¼-12	1-14	1⅝	1.999	⅝	1⅛	2⅝	1 5/16	⅜	1	7/16	2⅛	2⅝	2⅝	6 11/16
2½	1(Std.)	1	⅞-14	¾-16	1⅛	1.499	½	⅞	1⅞	15/16	¼	¾	½	2 1/16	2⅜	2⅜	6 9/16
	2	1¾	1½-12	1¼-12	2	2.374	¾	1½	3¼	1 11/16	½	1¼	½	2 9/16	2⅞	2⅞	7 1/16
	3	1⅜	1¼-12	1-14	1⅝	1.999	⅝	1⅛	2⅝	1 5/16	⅜	1	½	2 5/16	2⅝	2⅝	6 13/16
3¼	1(Std.)	1⅜	1¼-12	1-14	1⅝	1.999	⅝	1⅛	2½	1 5/16	¼	⅞	11/16	2 5/16	2¾	2¾	7 11/16
	2	2	1¾-12	1½-12	2¼	2.624	⅞	1 11/16	3½	1 15/16	⅜	1¼	11/16	2 11/16	3⅛	3⅛	8 1/16
	3	1¾	1½-12	1¼-12	2	2.374	¾	1½	3⅛	1 11/16	⅜	1⅛	11/16	2 9/16	3	3	7 15/16
4	1(Std.)	1¾	1½-12	1¼-12	2	2.374	¾	1½	3	1 11/16	¼	1	11/16	2¾	3	3	8 3/16
	2	2½	2¼-12	1⅞-12	3	3.124	1	2 1/16	4⅜	2⅜	⅜	1⅜	11/16	3⅛	3⅜	3⅜	8 9/16
	3	2	1¾-12	1½-12	2¼	2.624	⅞	1 11/16	3⅜	1 15/16	¼	1⅛	11/16	2⅞	3⅛	3⅛	8 5/16
5	1(Std.)	2	1¾-12	1½-12	2¼	2.624	⅞	1 11/16	3⅜	1 15/16	¼	1⅛	1	2⅞	3⅛	3⅛	9 1/16
	2	3½	3¼-12	2½-12	3½	4.249	1	3	4⅞	3⅜	⅜	1⅜	1	3⅛	3⅜	3⅜	9 5/16
	3	2½	2¼-12	1⅞-12	3	3.124	1	2 1/16	4⅜	2⅜	⅜	1⅜	1	3⅛	3⅜	3⅜	9 5/16
	4	3	2¾-12	2¼-12	3½	3.749	1	2⅝	4⅞	2⅞	⅜	1⅜	1	3⅛	3⅜	3⅜	9 5/16
6	1(Std.)	2½	2¼-12	1⅞-12	3	3.124	1	2 1/16	4¼	2⅜	¼	1¼	1¼	3⅜	3½	3½	10½
	2	4	3¾-12	3-12	4	4.749	1	3⅜	5¼	3⅞	¼	1¼	1¼	3⅜	3½	3½	10½
	3	3	2¾-12	2¼-12	3½	3.749	1	2⅝	4¾	2⅞	¼	1¼	1¼	3⅜	3½	3½	10½
	4	3½	3¼-12	2½-12	3½	4.249	1	3	4¾	3⅜	¼	1¼	1¼	3⅜	3½	3½	10½

Table 3 — Envelope and Mounting Dimensions

Series 2H
Heavy Duty Hydraulic Cylinders

Side End Angles Mounting Style CB (NFPA Style MS1)

The maximum recommended operating pressure for Style CB is 500 psi. The recommended minimum stroke length is two times the bore size.

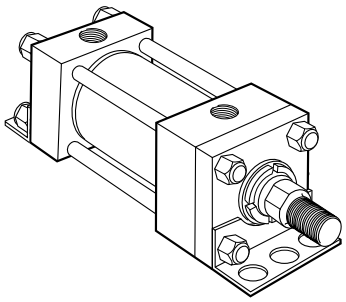

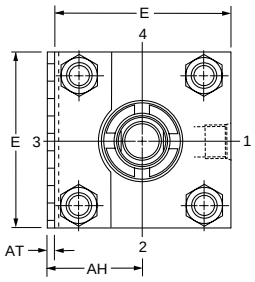

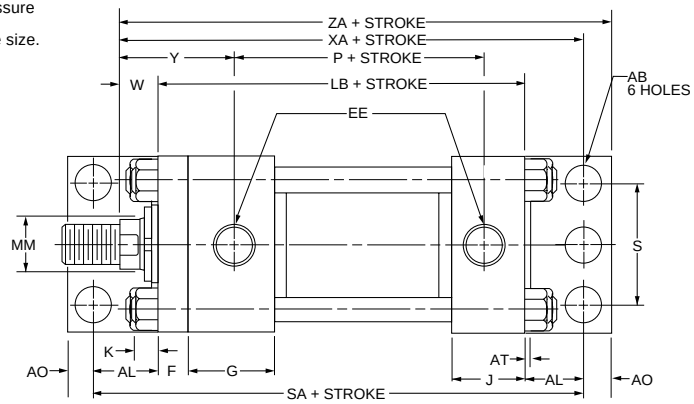

Side End Lugs Mounting Style G (NFPA Style MS7)

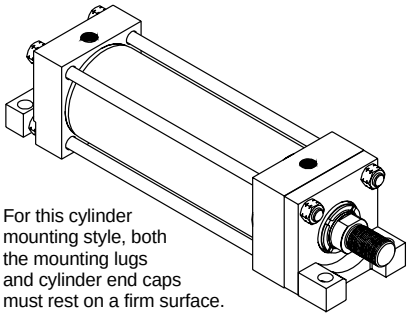

For this cylinder mounting style, both the mounting lugs and cylinder end caps must rest on a firm surface.

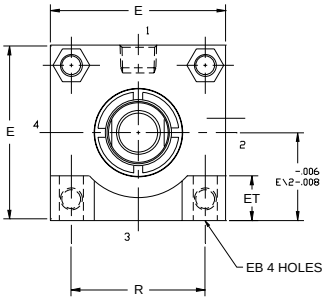

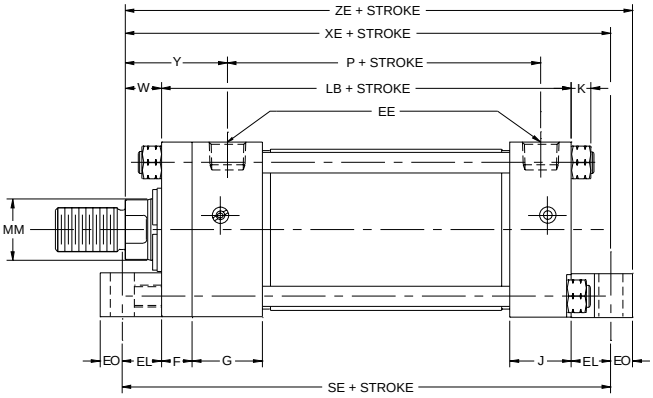

Cap Fixed Clevis Mounting Style BB (NFPA Style MP1)

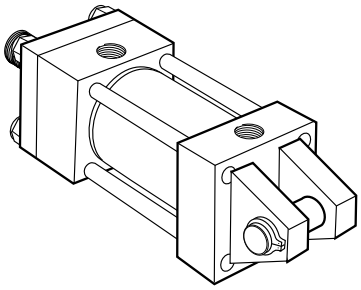

Tie rods thread into cap on all bore sizes.

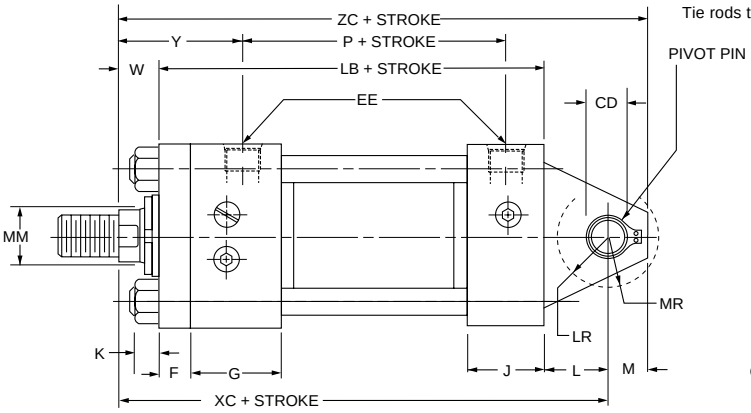

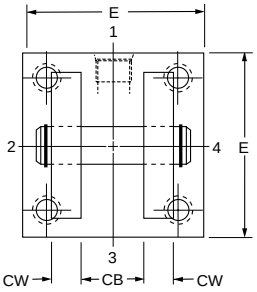

Rod End Dimensions — see table 2

Thread Style 4
(NFPA Style SM)
Small Male

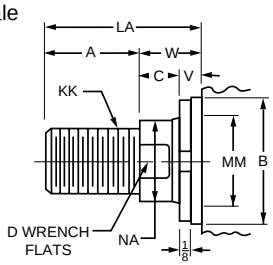

A high strength rod end stud is supplied on thread style 4 through 2" diameter rods and on thread style 8 through 1³/₈" diameter rods. Larger sizes or special rod ends are cut threads. Style 4 rod ends are recommended where the workpiece is secured against the rod shoulder.

Thread Style 8
(NFPA Style IM)
Intermediate Male

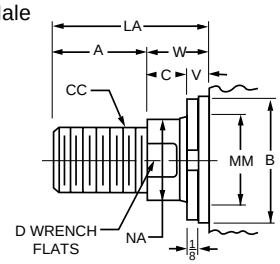

When the workpiece is not shouldered, style 4 rod ends are recommended through 2" piston rod diameters and style 8 rod ends are recommended on larger diameters. Use style 9 for applications where female rod end threads are required. If rod end is not specified, style 4 will be supplied.

Thread Style 9
(NFPA Style SF)
Small Female

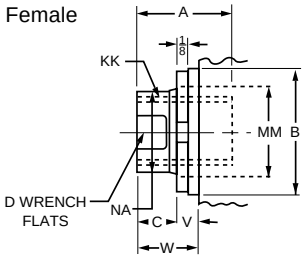

"Special" Thread Style 3

Special thread, extension, rod eye, blank, etc., are also available.

To order, specify "Style 3" and give desired dimensions for CC or KK, A and LA. If otherwise special, furnish dimensioned sketch.

For additional information – call your local Parker Cylinder Distributor.

Table 1—Envelope and Mounting Dimensions

Bore	AB	AH	AL	AO	AT	CB	+.000 -.002 CD*	CW	E	EB	EE ⊖ NPTF	EE ★ SAE	EL	EO	ES	ET	F	G	J	K	L	LR	M	MR	R	S	Add Stroke LB	P	SA	SE
1½	7/16	1 3/8	1	3/8	1/8	3/4	.501	1/2	2 1/2	7/16	1/2	10	7/8	3/8	7/8	3/4	3/8	1 3/4	1 1/2	3/8	3/4	9/16	1/2	5/8	1.63	1 3/4	5	2 7/8	7	6 3/4
2	9/16	1 11/16	1 1/4	1/2	1/8	1 1/4	.751	5/8	3	9/16	1/2	10	15/16	1/2	15/16	13/16	5/8	1 3/4	1 1/2	7/16	1 1/4	1	3/4	15/16	2.05	2	5 1/4	2 7/8	7 3/4	7 1/8
2½	11/16	1 15/16	1 3/16	9/16	1/8	1 1/4	.751	5/8	3 1/2	9/16	1/2	10	15/16	1/2	15/16	13/16	5/8	1 3/4	1 1/2	7/16	1 1/4	15/16	3/4	15/16	2.55	2 3/8	5 3/8	3	7 3/4	7 1/4
3¼	13/16	2 9/16	1 13/16	11/16	1/4	1 1/2	1.001	3/4	4 1/2	11/16	3/4	12	1 1/8	5/8	1 1/4	1 1/8	3/4	2	1 3/4	9/16	1 1/2	1 1/4	1	1 3/16	3.25	3 1/8	6 1/4	3 1/2	9 7/8	8 1/2
4	1 1/16	2 13/16	2 1/8	7/8	1/4	2	1.376	1	5	11/16	3/4	12	1 1/8	5/8	1 1/4	1 1/16	7/8	2	1 3/4	9/16	2 1/8	1 3/4	1 3/8	1 5/8	3.82	3 1/4	6 5/8	3 3/4	10 7/8	8 7/8
5	1 1/16	3 11/16	2 1/8	7/8	5/16	2 1/2	1.751	1 1/4	6 1/2	15/16	3/4	12	1 1/2	3/4	1 1/2	1 7/16	7/8	2	1 3/4	13/16	2 1/4	2 1/16	1 3/4	2 1/8	4.95	4 3/4	7 1/8	4 1/4	11 3/8	10 1/8
6	1 5/16	4 1/4	2 7/16	1 1/16	3/8	2 1/2	2.001	1 1/4	7 1/2	1 1/16	1	16	1 11/16	7/8	1 3/4	1 5/8	1	2 1/4	2 1/4	7/8	2 1/2	2 5/16	2	2 3/8	5.73	5 3/8	8 3/8	4 7/8	13 1/4	11 3/4

★ SAE straight thread ports are standard and are indicated by port number.
⊖ NPTF ports are available at no extra charge.
* Dimension CD is pin diameter.

B

Table 2—Rod Dimensions

Bore	Rod No.	Rod Dia. MM	Thread Style 8 CC	Thread Style 4 & 9 KK	Rod Extensions and Pilot Dimensions A	+.000 -.002 B	C	D	LA	NA	V	W
1½	1(Std.)	5/8	1/2-20	7/16-20	3/4	1.124	3/8	1/2	1 3/8	9/16	1/4	5/8
	2	1	7/8-14	3/4-16	1 1/8	1.499	1/2	7/8	2 1/8	15/16	1/2	1
2	1(Std.)	1	7/8-14	3/4-16	1 1/8	1.499	1/2	7/8	1 7/8	15/16	1/4	3/4
	2	1 3/8	1 1/4-12	1-14	1 5/8	1.999	5/8	1 1/8	2 5/8	1 5/16	3/8	1
2½	1(Std.)	1	7/8-14	3/4-16	1 1/8	1.499	1/2	7/8	1 7/8	15/16	1/4	3/4
	2	1 3/4	1 1/2-12	1 1/4-12	2	2.374	3/4	1 1/2	3 1/4	1 11/16	1/2	1 1/4
	3	1 3/8	1 1/4-12	1-14	1 5/8	1.999	5/8	1 1/8	2 5/8	1 5/16	3/8	1
3¼	1(Std.)	1 3/8	1 1/4-12	1-14	1 5/8	1.999	5/8	1 1/8	2 1/2	1 5/16	1/4	7/8
	2	2	1 3/4-12	1 1/2-12	2 1/4	2.624	7/8	1 11/16	3 1/2	1 15/16	3/8	1 1/4
	3	1 3/4	1 1/2-12	1 1/4-12	2	2.374	3/4	1 1/2	3 1/8	1 11/16	3/8	1 1/8
4	1(Std.)	1 3/4	1 1/2-12	1 1/4-12	2	2.374	3/4	1 1/2	3	1 11/16	1/4	1
	2	2 1/2	2 1/4-12	1 7/8-12	3	3.124	1	2 1/16	4 3/8	2 3/8	3/8	1 3/8
	3	2	1 3/4-12	1 1/2-12	2 1/4	2.624	7/8	1 11/16	3 3/8	1 15/16	1/4	1 1/8
5	1(Std.)	2	1 3/4-12	1 1/2-12	2 1/4	2.624	7/8	1 11/16	3 3/8	1 15/16	1/4	1 1/8
	2	3 1/2	3 1/4-12	2 1/2-12	3 1/2	4.249	1	3	4 7/8	3 3/8	3/8	1 3/8
	3	2 1/2	2 1/4-12	1 7/8-12	3	3.124	1	2 1/16	4 3/8	2 3/8	3/8	1 3/8
	4	3	2 3/4-12	2 1/4-12	3 1/2	3.749	1	2 5/8	4 7/8	2 7/8	3/8	1 3/8
6	1(Std.)	2 1/2	2 1/4-12	1 7/8-12	3	3.124	1	2 1/16	4 1/4	2 3/8	1/4	1 1/4
	2	4	3 3/4-12	3-12	4	4.749	1	3 3/8	5 1/4	3 7/8	1/4	1 1/4
	3	3	2 3/4-12	2 1/4-12	3 1/2	3.749	1	2 5/8	4 3/4	2 7/8	1/4	1 1/4
	4	3 1/2	3 1/4-12	2 1/2-12	3 1/2	4.249	1	3	4 3/4	3 3/8	1/4	1 1/4

Table 3 — Envelope and Mounting Dimensions

Bore	Rod No.	Y	Add Stroke XA	XC	XE	ZA	ZC	ZE
1½	1(Std.)	2	6 5/8	6 3/8	6 1/2	7	6 7/8	6 7/8
	2	2 3/8	7	6 3/4	6 7/8	7 3/8	7 1/4	7 1/4
2	1(Std.)	2 3/8	7 1/4	7 1/4	6 15/16	7 3/4	8	7 7/16
	2	2 5/8	7 1/2	7 1/2	7 3/16	8	8 1/4	7 11/16
2½	1(Std.)	2 3/8	7 5/16	7 3/8	7 1/16	7 7/8	8 1/8	7 9/16
	2	2 7/8	7 13/16	7 7/8	7 9/16	8 3/8	8 5/8	8 1/16
	3	2 5/8	7 9/16	7 5/8	7 5/16	8 1/8	8 3/8	7 13/16
3¼	1(Std.)	2 3/4	8 15/16	8 5/8	8 1/4	9 5/8	9 5/8	8 7/8
	2	3 1/8	9 5/16	9	8 5/8	10	10	9 1/4
	3	3	9 3/16	8 7/8	8 1/2	9 7/8	9 7/8	9 1/8
4	1(Std.)	3	9 3/4	9 3/4	8 3/4	10 5/8	11 1/8	9 3/8
	2	3 3/8	10 1/8	10 1/8	9 1/8	11	11 1/2	9 3/4
	3	3 1/8	9 7/8	9 7/8	8 7/8	10 3/4	11 1/4	9 1/2
5	1(Std.)	3 1/8	10 3/8	10 1/2	9 3/4	11 1/4	12 1/4	10 1/2
	2	3 3/8	10 5/8	10 3/4	10	11 1/2	12 1/2	10 3/4
	3	3 3/8	10 5/8	10 3/4	10	11 1/2	12 1/2	10 3/4
	4	3 3/8	10 5/8	10 3/4	10	11 1/2	12 1/2	10 3/4
6	1(Std.)	3 1/2	12 1/16	12 1/8	11 5/16	13 1/8	14 1/8	12 3/16
	2	3 1/2	12 1/16	12 1/8	11 5/16	13 1/8	14 1/8	12 3/16
	3	3 1/2	12 1/16	12 1/8	11 5/16	13 1/8	14 1/8	12 3/16
	4	3 1/2	12 1/16	12 1/8	11 5/16	13 1/8	14 1/8	12 3/16

Caution: When using mounting styles CB and G, check clearance between mounting members and rod attachment or accessory. If necessary, specify longer rod extension to avoid interference with mounting members.

Series 2H
Heavy Duty Hydraulic Cylinders

Head Trunnion Mounting
Style D
(NFPA Style MT1)

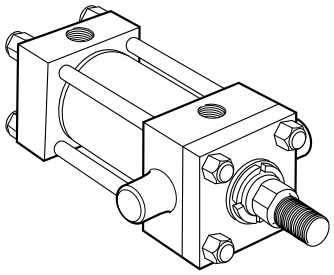

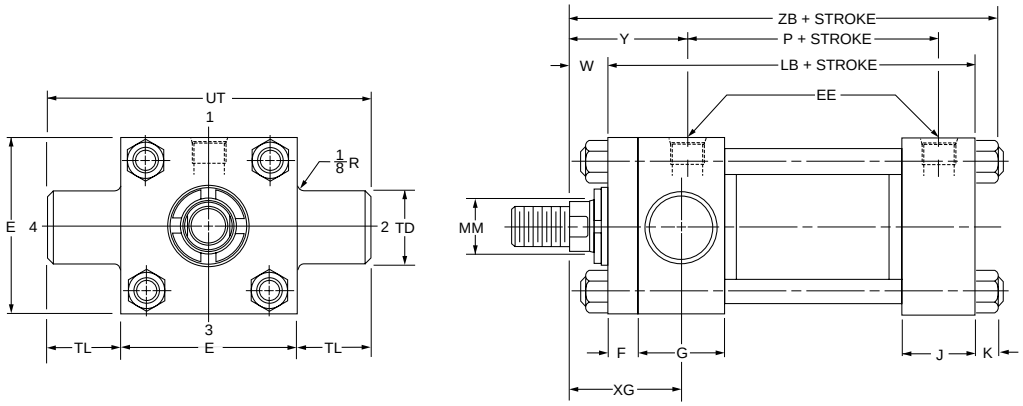

Cap Trunnion Mounting
Style DB
(NFPA Style MT2)

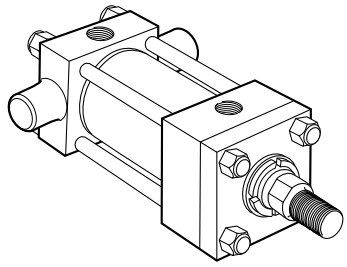

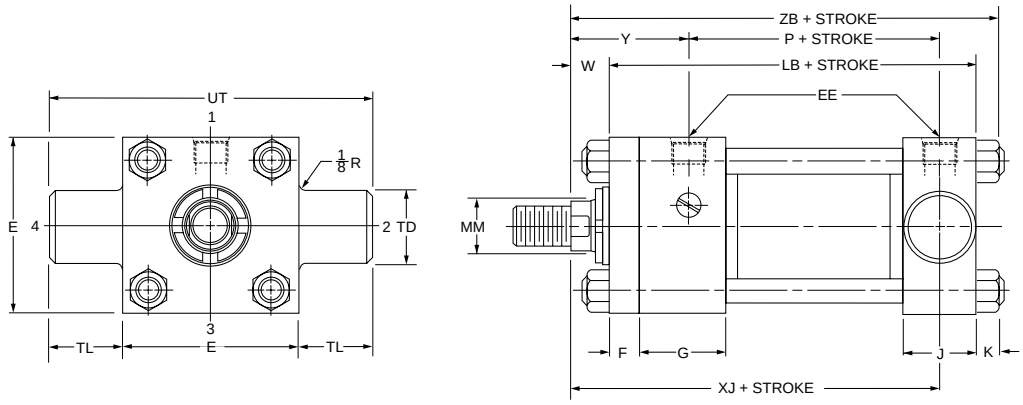

Intermediate Fixed Trunnion Mounting
Style DD
(NFPA Style MT4)

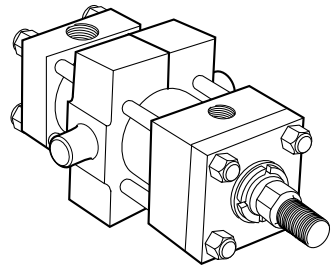

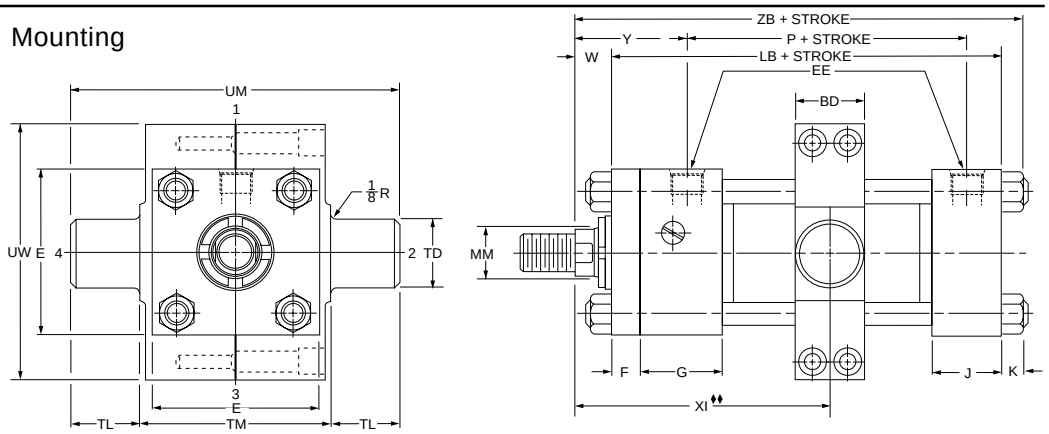

Rod End Dimensions — see table 2

Thread Style 4
(NFPA Style SM)
Small Male

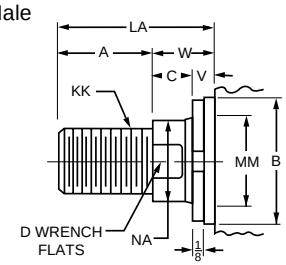

A high strength rod end stud is supplied on thread style 4 through 2" diameter rods and on thread style 8 through 1⅜" diameter rods. Larger sizes or special rod ends are cut threads. Style 4 rod ends are recommended where the workpiece is secured against the rod shoulder.

Thread Style 8
(NFPA Style IM)
Intermediate Male

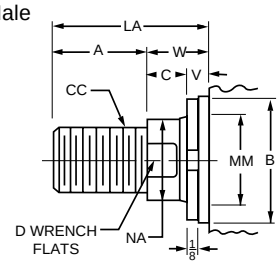

When the workpiece is not shouldered, style 4 rod ends are recommended through 2" piston rod diameters and style 8 rod ends are recommended on larger diameters. Use style 9 for applications where female rod end threads are required. If rod end is not specified, style 4 will be supplied.

Thread Style 9
(NFPA Style SF)
Small Female

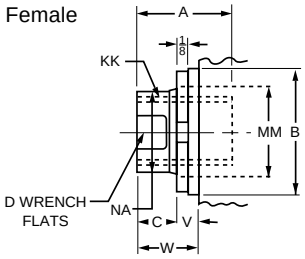

"Special" Thread Style 3

Special thread, extension, rod eye, blank, etc., are also available.

To order, specify "Style 3" and give desired dimensions for CC or KK, A and LA. If otherwise special, furnish dimensioned sketch.

For additional information – call your local Parker Cylinder Distributor.

Table 1—Envelope and Mounting Dimensions

Bore	BD	E	EE NPTF⊖	EE SAE★	F	G	J	K	+.000 -.001 TD	TL	TM	UM	UT	UW	Add Stroke LB	Add Stroke P	Style DD Minimum Stroke
1½	1¼	2½	½	10	⅜	1¾	1½	⅜	1.000	1	3	5	4½	3⅜	5	2⅞	0
2	1½	3	½	10	⅝	1¾	1½	7/16	1.375	1⅜	3½	6¼	5¾	4⅛	5¼	2⅞	¼
2½	1½	3½	½	10	⅝	1¾	1½	7/16	1.375	1⅜	4	6¾	6¼	4⅝	5⅜	3	⅛
3¼	2	4½	¾	12	¾	2	1¾	9/16	1.750	1¾	5	8½	8	5 13/16	6¼	3½	⅜
4	2	5	¾	12	⅞	2	1¾	9/16	1.750	1¾	5½	9	8½	6⅜	6⅝	3¾	⅛
5	2	6½	¾	12	⅞	2	1¾	13/16	1.750	1¾	7	10½	10	7¾	7⅛	4¼	0
6	3	7½	1	16	1	2¼	2¼	⅞	2.000	2	8½	12½	11½	10⅜	8⅜	4⅞	¼

★ SAE straight thread ports are standard and are indicated by port number.
⊖ NPTF ports are available at no extra charge.

B

Table 2—Rod Dimensions

Bore	Rod No.	Rod Dia. MM	Thread Style 8 CC	Thread Style 4 & 9 KK	Rod Extensions and Pilot Dimensions A	+.000 -.002 B	C	D	LA	NA	V	W	XG	Min.◆◆ XI	Y	Add Stroke XJ	Add Stroke ZB
1½	1(Std.)	⅝	½-20	7/16-20	¾	1.124	⅜	½	1⅜	9/16	¼	⅝	1⅞	3 7/16	2	4⅞	6
	2	1	⅞-14	¾-16	1⅛	1.499	½	⅞	2⅛	15/16	½	1	2¼	3 13/16	2⅜	5¼	6⅜
2	1(Std.)	1	⅞-14	¾-16	1⅛	1.499	½	⅞	1⅞	15/16	¼	¾	2¼	3 15/16	2⅜	5¼	6 7/16
	2	1⅜	1¼-12	1-14	1⅝	1.999	⅝	1⅛	2⅝	1 5/16	⅜	1	2½	4 3/16	2⅝	5½	6 11/16
2½	1(Std.)	1	⅞-14	¾-16	1⅛	1.499	½	⅞	1⅞	15/16	¼	¾	2¼	3 15/16	2⅜	5⅜	6 9/16
	2	1¾	1½-12	1¼-12	2	2.374	¾	1½	3¼	1 11/16	½	1¼	2¾	4 7/16	2⅞	5⅞	7 1/16
	3	1⅜	1¼-12	1-14	1⅝	1.999	⅝	1⅛	2⅝	1 5/16	⅜	1	2½	4 3/16	2⅝	5⅝	6 13/16
3¼	1(Std.)	1⅜	1¼-12	1-14	1⅝	1.999	⅝	1⅛	2½	1 5/16	¼	⅞	2⅝	4 11/16	2¾	6¼	7 11/16
	2	2	1¾-12	1½-12	2¼	2.624	⅞	1 11/16	3½	1 15/16	⅜	1¼	3	5 1/16	3⅛	6⅝	8 1/16
	3	1¾	1½-12	1¼-12	2	2.374	¾	1½	3⅛	1 11/16	⅜	1⅛	2⅞	4 15/16	3	6½	7 15/16
4	1(Std.)	1¾	1½-12	1¼-12	2	2.374	¾	1½	3	1 11/16	¼	1	2⅞	4 15/16	3	6¾	8 3/16
	2	2½	2¼-12	1⅞-12	3	3.124	1	2 1/16	4⅜	2⅜	⅜	1⅜	3¼	5 5/16	3⅜	7⅛	8 9/16
	3	2	1¾-12	1½-12	2¼	2.624	⅞	1 11/16	3⅜	1 15/16	¼	1⅛	3	5 1/16	3⅛	6⅞	8 5/16
5	1(Std.)	2	1¾-12	1½-12	2¼	2.624	⅞	1 11/16	3⅜	1 15/16	¼	1⅛	3	5 1/16	3⅛	7⅜	9 1/16
	2	3½	3¼-12	2½-12	3½	4.249	1	3	4⅞	3⅜	⅜	1⅜	3¼	5 5/16	3⅜	7⅝	9 5/16
	3	2½	2¼-12	1⅞-12	3	3.124	1	2 1/16	4⅜	2⅜	⅜	1⅜	3¼	5 5/16	3⅜	7⅝	9 5/16
	4	3	2¾-12	2¼-12	3½	3.749	1	2⅝	4⅞	2⅞	⅜	1⅜	3¼	5 5/16	3⅜	7⅝	9 5/16
6	1(Std.)	2½	2¼-12	1⅞-12	3	3.124	1	2 1/16	4¼	2⅜	¼	1¼	3⅜	6 1/16	3½	8⅜	10½
	2	4	3¾-12	3-12	4	4.749	1	3⅜	5¼	3⅞	¼	1¼	3⅜	6 1/16	3½	8⅜	10½
	3	3	2¾-12	2¼-12	3½	3.749	1	2⅝	4¾	2⅞	¼	1¼	3⅜	6 1/16	3½	8⅜	10½
	4	3½	3¼-12	2½-12	3½	4.249	1	3	4¾	3⅜	¼	1¼	3⅜	6 1/16	3½	8⅜	10½

Table 3 — Envelope and Mounting Dimensions

◆◆ Dimension XI to be specified by customer.

Series 2H
Heavy Duty Hydraulic Cylinders

Bore	Max. Op. PSI†
1½	1250
2	2200
2½	1450
3¼	1500
4	1850
5	2000
6	1800

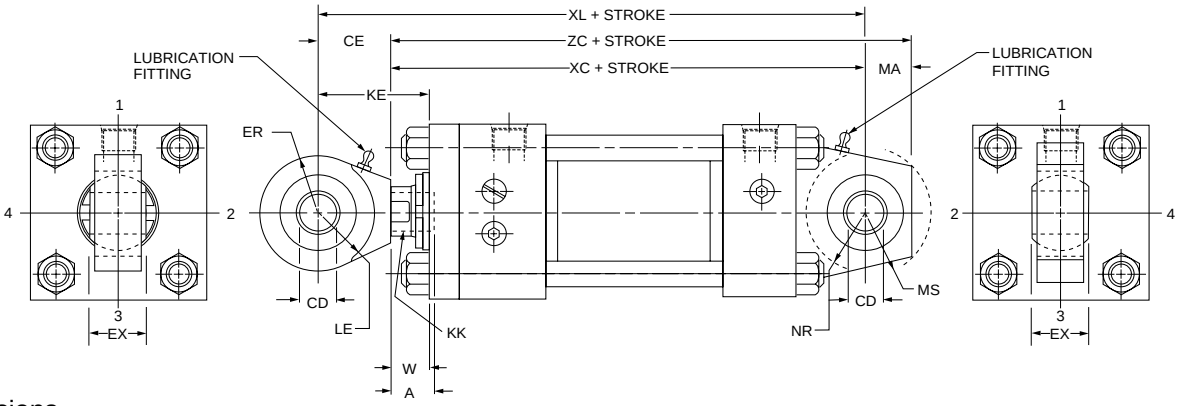

Table 1 — Dimensions

Bore	Rod No.	Rod Dia. MM	Thread Style 9 KK	Thread Style 7 KK	A	W	Add Stroke XC	Add Stroke XL	Add Stroke ZC	KE	CD*	CE	ER	EX	LE	MA	MS	NR
1½	1(Std.)	5/8	7/16-20	—	3/4	5/8	6 3/8	7 1/4	7 1/8	1 1/2	-.0005	7/8	13/16	7/16	3/4	3/4	15/16	5/8
	2	1	—	7/16-20	3/4	1	6 3/4	7 5/8	7 1/2	1 7/8	.5000							
2	1(Std.)	1	3/4-16	—	1 1/8	3/4	7 1/4	8 1/2	8 1/4	2	-.0005	1 1/4	1 1/8	21/32	1 1/16	1	1 3/8	1
	2	1 3/8	—	3/4-16	1 1/8	1	7 1/2	8 3/4	8 1/2	2 1/4	.7500							
2½	1(Std.)	1	3/4-16	—	1 1/8	3/4	7 3/8	8 5/8	8 3/8	2	-.0005	1 1/4	1 1/8	21/32	1 1/16	1	1 3/8	1
	2	1 3/4	—	3/4-16	1 1/8	1 1/4	7 7/8	9 1/8	8 7/8	2 1/2								
	3	1 3/8	—	3/4-16	1 1/8	1	7 5/8	8 7/8	8 5/8	2 1/4	.7500							
3¼	1(Std.)	1 3/8	1-14	—	1 5/8	7/8	8 5/8	10 1/2	9 7/8	2 3/4	-.0005	1 7/8	1 1/4	7/8	1 7/16	1 1/4	1 11/16	1 1/4
	2	2	—	1-14	1 5/8	1 1/4	9	10 7/8	10 1/4	3 1/8								
	3	1 3/4	—	1-14	1 5/8	1 1/8	8 7/8	10 3/4	10 1/8	3	1.0000							
4	1(Std.)	1 3/4	1 1/4-12	—	2	1	9 3/4	11 7/8	11 5/8	3 1/8	-.0005	2 1/8	1 11/16	1 3/16	1 7/8	1 7/8	2 7/16	1 5/8
	2	2 1/2	—	1 1/4-12	2	1 3/8	10 1/8	12 1/4	12	3 1/2								
	3	2	—	1 1/4-12	2	1 1/8	9 7/8	12	11 3/4	3 1/4	1.3750							
5	1(Std.)	2	1 1/2-12	—	2 1/4	1 1/8	10 1/2	13	13	3 5/8	-.0005	2 1/2	2 1/16	1 17/32	2 1/8	2 1/2	2 7/8	2 1/16
	2	3 1/2	—	1 1/2-12	2 1/4	1 3/8	10 3/4	13 1/4	13 1/4	3 7/8								
	3	2 1/2	—	1 1/2-12	2 1/4	1 3/8	10 3/4	13 1/4	13 1/4	3 7/8								
	4	3	—	1 1/2-12	2 1/4	1 3/8	10 3/4	13 1/4	13 1/4	3 7/8	1.7500							
6	1(Std.)	2 1/2	1 7/8-12	—	3	1 1/4	12 1/8	14 7/8	14 5/8	4	-.0005	2 3/4	2 1/2	1 3/4	2 1/2	2 1/2	3 5/16	2 3/8
	2	4	—	1 7/8-12	3	1 1/4	12 1/8	14 7/8	14 5/8	4								
	3	3	—	1 7/8-12	3	1 1/4	12 1/8	14 7/8	14 5/8	4								
	4	3 1/2	—	1 7/8-12	3	1 1/4	12 1/8	14 7/8	14 5/8	4	2.0000							

†Maximum operating pressure at 4:1 design factor is based on tensile strength of material. Pressure ratings are based on standard commercial bearing ratings.
Note: for additional dimensions see Series 2H Style BB mount.
Rod No. 1 is standard.
*Dimension "CD" is hole diameter.

Mounting Information

Head End Mounting

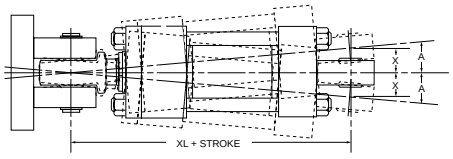

Cap End Mounting

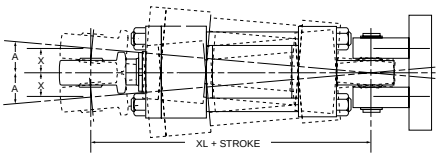

Recommended maximum swivel angle on each side of the cylinder centerline.

Table 1

Bore	Head End Mounted Angle a	Head End Mounted Tan. of a	Cap End Mounted Angle a	Cap End Mounted Tan. of a
1½	2½	.035	2½	.035
2	2½½	.044	4½½	.079
2½	2½½	.044	4½½	.079
3¼	3½	.052	3½	.052
4	2½½	.044	3½	.052
5	3½	.052	3½	.052
6	3½	.052	3½	.052

Note: Dimension X is the maximum off center mounting of the cylinder. To determine dimension X for various stroke lengths multiply the distance between pivot pin holes by tangent of angle a. For extended position use X = XL times 2X stroke.

For additional information – call your local Parker Cylinder Distributor.

Series 2H
Heavy Duty Hydraulic Cylinders

Parker offers a complete range of Cylinder Accessories to assure you of the greatest versatility in present or future cylinder applications. Accessories offered for the respective cylinder include the Rod Eye, Pivot Pin and Clevis Bracket. To select the proper part number for any desired accessory refer to the charts below.

Spherical Rod Eye

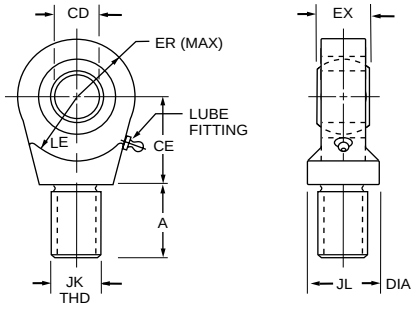

Bore Sizes	Series 2H	1 1/2	2 & 2 1/2	3 1/4	4	5	6
Rod Eye	Part No.	132290	132291	132292	132293	132294	132295
	CD	.5000-0005	.7500-0005	1.0000-0005	1.3750-0005	1.7500-0005	2.0000-0005
	A	11/16	1	1 1/2	2	2 1/8	2 7/8
	CE	7/8	1 1/4	1 7/8	2 1/8	2 1/2	2 3/4
	EX	7/16	21/32	7/8	1 3/16	1 17/32	1 3/4
	ER	13/16	1 1/8	1 1/4	1 11/16	2 1/16	2 1/2
	LE	3/4	1 1/16	1 7/16	1 7/8	2 1/8	2 1/2
	JK	7/16-20	3/4-16	1-14	1 1/4-12	1 1/2-12	1 7/8-12
	JL	7/8	1 5/16	1 1/2	2	2 1/4	2 3/4
	LOAD CAPACITY LBS.	2644	9441	16860	28562	43005	70193

Order to fit Piston Rod Thread Size.

Pivot Pin

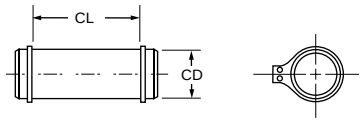

Bore Sizes	Series 2H	1 1/2	2 & 2 1/2	3 1/4	4	5	6
Pivot Pin	Part No.	83962	83963	83964	83965	83966	83967
	CD	.4997-0004	.7497-0005	.9997-0005	1.3746-0006	1.7496-0006	1.9996-0007
	CL	1 9/16	2 1/32	2 1/2	3 5/16	4 7/32	4 15/16
	SHEAR CAPACITY LBS.	8600	19300	34300	65000	105200	137400

Pivot Pins are furnished with
(2) Retainer Rings.

Clevis Bracket

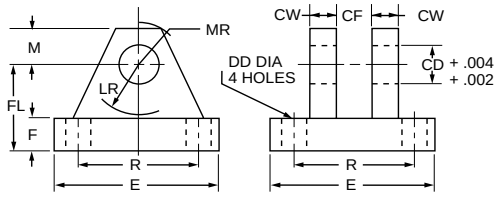

Bore Sizes	Series 2H	1 1/2	2 & 2 1/2	3 1/4	4	5	6
Clevis Bracket	Part No.	83947	83948	83949	83950	83951	83952
	CD	1/2	3/4	1	1 3/8	1 3/4	2
	CF	7/16	21/32	7/8	1 3/16	1 17/32	1 3/4
	CW	1/2	5/8	3/4	1	1 1/4	1 1/2
	DD	13/32	17/32	17/32	21/32	29/32	29/32
	E	3	3 3/4	5 1/2	6 1/2	8 1/2	10 5/8
	F	1/2	5/8	3/4	7/8	1 1/4	1 1/2
	FL	1 1/2	2	2 1/2	3 1/2	4 1/2	5
	LR	15/16	1 3/8	1 11/16	2 7/16	2 7/8	3 5/16
	M	1/2	7/8	1	1 3/8	1 3/4	2
	MR	5/8	1	1 3/16	1 5/8	2 1/16	2 3/8
	R	2.05	2.76	4.10	4.95	6.58	7.92
	LOAD CAPACITY LBS.	5770	9450	14300	20322	37800	50375

Order to fit Mounting Plate or
Rod Eye.

For Cylinder Division Plant Locations – See Page II.

Series 2H
Heavy Duty Hydraulic Cylinders

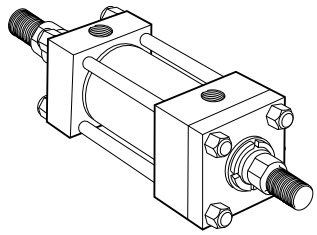

Mounting Styles for Single Rod Models	Mounting Styles for Corresponding Double Rod Models*	Dimensions Shown on This Page Supplement Dimensions on Pages Listed Below
		1½" - 6" Bores Page No.
T	KT	42
TB	KTB	42
TD	KTD	42
J	KJ	44
JB	KJB	44
JJ	KJJ	44
C	KC	48
E	KE	48
F	KF	48
CB	KCB	50
G	KG	50
D	KD	52
DD	KDD	52

*If only one end of these Double Rod Cylinders is to be cushioned, be sure to specify clearly which end this will be.

How to Use Double Rod Cylinder Dimensioned Drawings

1½" to 6" Bores

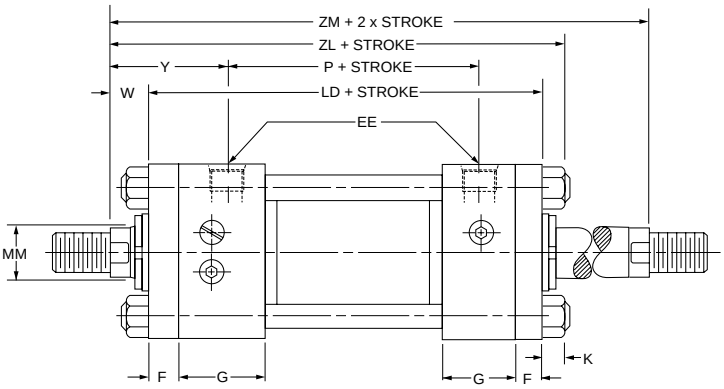

To determine dimensions for a double rod cylinder, first refer to the desired single rod mounting style cylinder shown on preceding pages of this catalog. (See table at left.) After selecting necessary dimensions from that drawing, return to this page supplement the single rod dimensions with those shown on drawing at right and dimension table below. Note that double rod cylinders have a head (Dim. G) at both ends and that dimension LD replaces LB and ZL replaces ZB, etc. The double rod dimensions differ from, or are in addition to those for single rod cylinders shown on preceding pages and provide the information needed to completely dimension a double rod cylinder.

On a double rod cylinder where the two rod ends are different, be sure to clearly state which rod end is to be assembled at which end. Port position 1 is standard. If other than standard, specify pos. 2, 3 or 4 when viewed from one end only. See port position information in Section C.

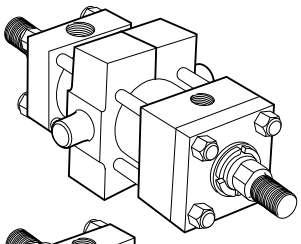

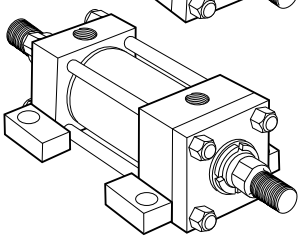

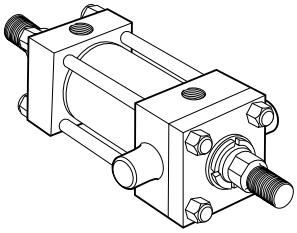

All dimensions are in inches and apply to Code 1 rod sizes only. For alternate rod sizes, determine all envelope dimensions (within LD dim.) as described above and then use appropriate rod end dimensions for proper rod size from single rod cylinder.

Bore	Rod No.	Rod Dia. MM	LD	Add stroke									Add 2X Stroke
				ZL	SAK	XAK	ZAK	SNK	SSK	SEK	XEK	ZEK	ZM
1½	1	⅝	5⅝	6⅝	7⅝	7¼	7⅝	2⅞	4⅛	7⅜	7⅛	7½	6⅞
2	1	1	6⅛	7 5/16	8⅝	8⅛	8⅝	2⅞	3⅞	8	7 13/16	8 5/16	7⅝
2½	1	1	6¼	7 7/16	8⅝	8 3/16	8¾	3	3⅝	8⅛	7 15/16	8 7/16	7¾
3¼	1	1⅜	7¼	8 11/16	10⅞	9 15/16	10⅝	3½	4⅜	9½	9¼	9⅞	9
4	1	1¾	7¾	9 5/16	12	10⅞	11¾	3¾	4¼	10	9⅞	10½	9¾
5	1	2	8¼	10 3/16	12½	11½	12⅜	4¼	4¾	11¼	10⅞	11⅝	10½
6	1	2½	9⅜	11½	14¼	13 1/16	14⅛	4⅞	5⅛	12¾	12 5/16	13 3/16	11⅞
Replaces:			**LB**	**ZB**	**SA**	**XA**	**ZA**	**SN**	**SS**	**SE**	**XE**	**ZE**	—
On single rod mounting styles:			**All Mtg. Styles**		**CB**			**F**	**C,E**	**G**			**All Mtgs.**

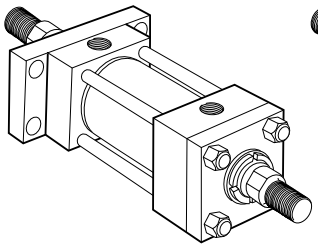

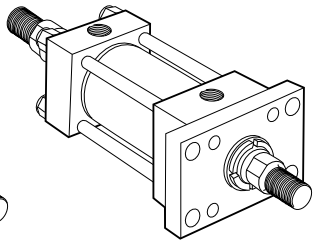

For additional information – call your local Parker Cylinder Distributor.

NOTES

B

Series 2H
Heavy Duty Hydraulic Cylinders

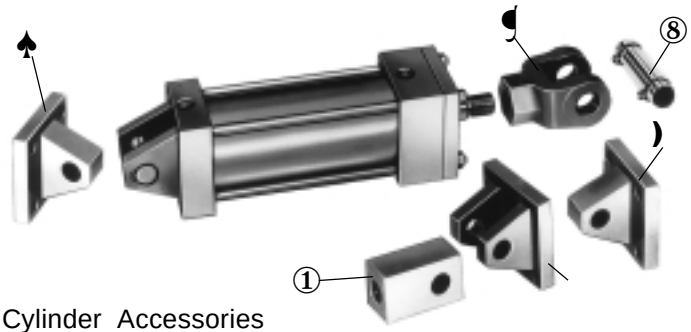

Cylinder Accessories

Parker offers a complete range of cylinder accessories to assure you of greatest versatility in present or future cylinder applications.

Rod End Accessories

Accessories offered for the rod end of the cylinder include Rod Clevis, Eye Bracket, Knuckle, Clevis Bracket and Pivot Pin. To select the proper part number for any desired accessory, refer to Chart A below and look opposite the thread size of the rod end as indicated in the first column. The Pivot Pins, Eye Brackets and Clevis Brackets are listed opposite the thread size which their mating Knuckles or Clevises fit.

Chart A

	Mating Parts			Mating Parts			
Thread Size	Rod Clevis	Eye Bracket	Pin	Knuckle	Clevis Bracket	Pin	Alignment Coupler
5/16-24	51221	74077	—	74075	74076	74078	144500-0105
7/16-20	50940	69195	68368	69089	69205	68368	144500-0107
1/2-20	50941	69195	68368	69090	69205	68368	144500-0108
3/4-16	50942	69196	68369	69091	69206	68369	144500-0112
3/4-16	133284	69196	68369	69091	69206	68369	144500-0112
7/8-14	50943	*85361	68370	69092	69207	68370	144500-0114
1-14	50944	*85361	68370	69093	69207	68370	144500-0116
1-14	133285	*85361	68370	69093	69207	68370	144500-0116
1 1/4-12	50945	69198	68371	69094	69208	68371	144500-0120
1 1/4-12	133286	69198	68371	69094	69208	68371	144500-0120
1 1/2-12	50946	*85362	68372	69095	69209	68372	Consult Factory
1 3/4-12	50947	*85363	68373	69096	69210	69215	
1 7/8-12	50948	*85363	68373	69097	69210	69215	
2 1/4-12	50949	*85364	68374	69098	69211	68374	
2 1/2-12	50950	*85365	68375	69099	69212	68375	
2 3/4-12	50951	*85365	68375	69100	69213	69216	
3 1/4-12	50952	73538	73545	73536	73542	73545	
3 1/2-12	50953	73539	73547	73437	73542	73545	
4-12	50954	73539	73547	73438	73543	82181	

For alignment coupler dimensions, see section C.

*Cylinder accessory dimensions conform to NFPA recommended standard NFPA/T3.6.8 R1-1984, NFPA recommended standard fluid power systems — cylinder — dimensions for accessories for cataloged square head industrial types. Parker adopted this standard in April, 1985. Eye Brackets or Mounting Plates shipped before this date may have different dimensions and will not necessarily interchange with the NFPA standard. For dimensional information on older style Eye Brackets or Mounting Plates consult Drawing #144805 or previous issues of this catalog.

Accessory Load Capacity

The various accessories on this and the following pages have been load rated for your convenience. The load capacity in lbs., shown on the following page is the recommended maximum load for that accessory based on a 4:1 design factor in tension. (Pivot Pin is rated in shear.) Before specifying, compare the actual load or the tension (pull) force at maximum operating pressure of the cylinder with the load capacity of the accessory you plan to use. If load or pull force of cylinder exceeds load capacity of accessory, consult factory.

Chart B

Mtg. Plate Part No.	Series 2H Bore Size
69195	1 1/2"
69196	2", 2 1/2"
*85361	3 1/4"
69198	4"
*85362	5"
*85363	6"

Mounting Plates

Mounting Plates for Style BB (clevis mounted) cylinders are offered. To select proper part number for your application, refer to Chart B, above right.

❦ Female Rod Clevis

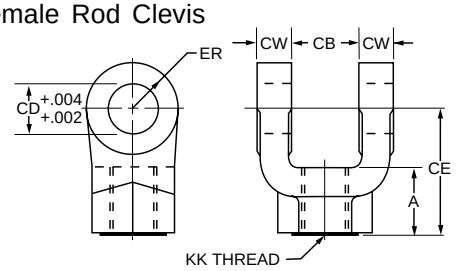

②

Order to fit thread size.

① Knuckle (Female Rod Eye)

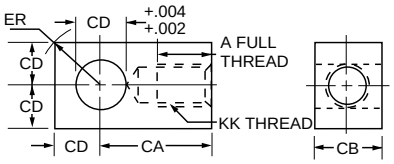

②

Order to fit thread size.

Clevis Bracket for Knuckle

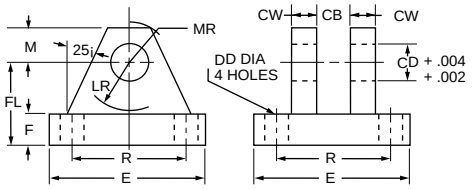

②

Order to fit Knuckle.

♠ Mounting Plate or ❩ Eye Bracket

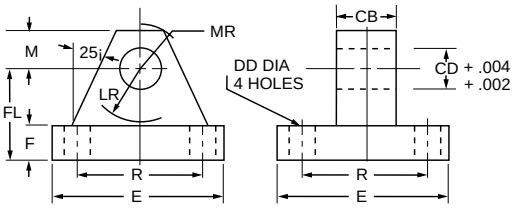

②

1. When used to mate with the Rod Clevis, select from Chart A.
2. When used to mount the Style BB cylinders, select from the Mounting Plate Selection Table. See Chart B at lower left.

⑧ Pivot Pin

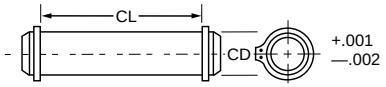

②

1. Pivot Pins are furnished with Clevis Mounted Cylinders as standard.
2. Pivot Pins are furnished with (2) Retainer Rings.
3. Pivot Pins must be ordered as separate item if to be used with Knuckles, Rod Clevises, or Clevis Brackets.

For additional information – call your local Parker Cylinder Distributor.

Series 2H
Heavy Duty Hydraulic Cylinders

	Female Rod Clevis Part Number																		
	51221†	50940	50941	50942	133284	50943	50944	133285	50945	133286	50946	50947	50948	50949	50950	50951	50952	50953	50954
A	13/16	3/4	3/4	1 1/8	1 1/8	1 5/8	1 5/8	1 5/8	2	2	2 1/4	3	3	3 1/2	3 1/2	3 1/2	3 1/2‡†	4‡†	4‡†
CB	11/32	3/4	3/4	1 1/4	1 1/4	1 1/2	1 1/2	1 1/2	2	2	2 1/2	2 1/2	2 1/2	3	3	3	4	4 1/2	4 1/2
CD	5/16	1/2	1/2	3/4	3/4	1	1	1	1 3/8	1 3/8	1 3/4	2	2	2 1/2	3	3	3 1/2	4	4
CE	2 1/4	1 1/2	1 1/2	2 1/8	2 3/8	2 15/16	2 15/16	3 1/8	3 3/4	4 1/8	4 1/2	5 1/2	5 1/2	6 1/2	6 3/4	6 3/4	7 3/4	8 13/16	8 13/16
CW	13/64	1/2	1/2	5/8	5/8	3/4	3/4	3/4	1	1	1 1/4	1 1/4	1 1/4	1 1/2	1 1/2	1 1/2	2	2 1/4	2 1/4
ER	19/64	1/2	1/2	3/4	3/4	1	1	1	1 3/8	1 3/8	1 3/4	2	2	2 1/2	2 3/4	2 3/4	3 1/2	4	4
KK	15/16-24	7/16-20	1/2-20	3/4-16	3/4-16	7/8-14	1-14	1-14	1 1/4-12	1 1/4-12	1 1/2-12	1 3/4-12	1 7/8-12	2 1/4-12	2 1/2-12	2 3/4-12	3 1/4-12	3 1/2-12	4-12
Load Capacity Lbs. ⊖	2600	4250	4900	11200	11200	18800	19500	19500	33500	33500	45600	65600	65600	98200	98200	98200	156700	193200	221200

	Knuckle Part Number																
	74075	69089	69090	69091	69092	69093	69094	69095	69096	69097	69098	69099	69100	73536	73437	73438	73439
A	3/4	3/4	3/4	1 1/8	1 1/8	1 5/8	2	2 1/4	2 1/4	3	3 1/2	3 1/2	3 5/8	4‡	5	5 1/2	5 1/2
CA	1 1/2	1 1/2	1 1/2	2 1/16	2 3/8	2 13/16	3 7/16	4	4 3/8	5	5 13/16	6 1/8	6 1/2	7 5/8	7 5/8	9 1/8	9 1/8
CB	7/16	3/4	3/4	1 1/4	1 1/2	1 1/2	2	2 1/2	2 1/2	2 1/2	3	3	3 1/2	4	4	4 1/2	5
CD	7/16	1/2	1/2	3/4	1	1	1 3/8	1 3/4	2	2	2 1/2	3	3	3 1/2	3 1/2	4	4
ER	19/32	23/32	23/32	1 1/16	1 7/16	1 7/16	1 31/32	2 1/2	2 27/32	2 27/32	3 9/16	4 1/4	4 1/4	4 31/32	4 31/32	5 11/16	5 11/16
KK	5/16-24	7/16-20	1/2-20	3/4-16	7/8-14	1-14	1 1/4-12	1 1/2-12	1 3/4-12	1 7/8-12	2 1/4-12	2 1/2-12	2 3/4-12	3 1/4-12	3 1/2-12	4-12	4 1/2-12
Load Capacity Lbs. ⊖	3300	5000	5700	12100	13000	21700	33500	45000	53500	75000	98700	110000	123300	161300	217300	273800	308500

	Clevis Bracket for Knuckle Part Number												
	74076	69205	69206	69207	69208	69209	69210	69211	69212	69213	73542	73543	73544
CB	15/32	3/4	1 1/4	1 1/2	2	2 1/2	2 1/2	3	3	3 1/2	4	4 1/2	5
CD	7/16	1/2	3/4	1	1 3/8	1 3/4	2	2 1/2	3	3	3 1/2	4	4
CW	3/8	1/2	5/8	3/4	1	1 1/4	1 1/2	1 1/2	1 1/2	1 1/2	2	2	2
DD	17/64	13/32	17/32	21/32	21/32	29/32	1 1/16	1 3/16	1 5/16	1 5/16	1 13/16	2 1/16	2 1/16
E	2 1/4	3 1/2	5	6 1/2	7 1/2	9 1/2	12 3/4	12 3/4	12 3/4	12 3/4	15 1/2	17 1/2	17 1/2
F	3/8	1/2	5/8	3/4	7/8	7/8	1	1	1	1	1 11/16	1 15/16	1 15/16
FL	1	1 1/2	1 7/8	2 1/4	3	3 5/8	4 1/4	4 1/2	6	6	6 11/16	7 11/16	7 11/16
LR	5/8	3/4	1 3/16	1 1/2	2	2 3/4	3 3/16	3 1/2	4 1/4	4 1/4	5	5 3/4	5 3/4
M	3/8	1/2	3/4	1	1 3/8	1 3/4	2 1/4	2 1/2	3	3	3 1/2	4	4
MR	1/2	5/8	29/32	1 1/4	1 21/32	2 7/32	2 25/32	3 1/8	3 19/32	3 19/32	4 1/8	4 7/8	4 7/8
R	1.75	2.55	3.82	4.95	5.73	7.50	9.40	9.40	9.40	9.40	12.00	13.75	13.75
Load Capacity Lbs. ⊖	3600	7300	14000	19200	36900	34000	33000	34900	33800	36900	83500	102600	108400

	Eye Bracket and Mounting Plate Part Number										
	74077	69195	69196	85361*	69198	85362*	85363*	85364*	85365*	73538	73539
CB	5/16	3/4	1 1/4	1 1/2	2	2 1/2	2 1/2	3	3	4	4 1/2
CD	5/16	1/2	3/4	1	1 3/8	1 3/4	2	2 1/2	3	3 1/2	4
DD	17/64	13/32	17/32	21/32	21/32	29/32	1 1/16	1 3/16	1 5/16	1 13/16	2 1/16
E	2 1/4	2 1/2	3 1/2	4 1/2	5	6 1/2	7 1/2	8 1/2	9 1/2	12 5/8	14 7/8
F	3/8	3/8	5/8	7/8	7/8	1 1/8	1 1/2	1 3/4	2	1 11/16	1 15/16
FL	1	1 1/8	1 7/8	2 3/8	3	3 3/8	4	4 3/4	5 1/4	5 11/16	6 7/16
LR	5/8	3/4	1 1/4	1 1/2	2 1/8	2 1/4	2 1/2	3	3 1/4	4	4 1/2
M	3/8	1/2	3/4	1	1 3/8	1 3/4	2	2 1/2	2 3/4	3 1/2	4
MR	1/2	9/16	7/8	1 1/4	1 5/8	2 1/8	2 7/16	3	3 1/4	4 1/8	5 1/4
R	1.75	1.63	2.55	3.25	3.82	4.95	5.73	6.58	7.50	9.62	11.45
Load Capacity Lbs. ⊖	1700	4100	10500	20400	21200	49480	70000	94200	121900	57400	75000

	Pivot Pin Part Number													
	74078	68368	68369	68370	68371	68372	68373	69215	68374	68375	69216	73545	82181	73547•
CD	7/16	1/2	3/4	1	1 3/8	1 3/4	2	2	2 1/2	3	3	3 1/2	4	4
CL	1 5/16	1 7/8	2 5/8	3 1/8	4 1/8	5 3/16	5 3/16	5 11/16	6 3/16	6 1/4	6 3/4	8 1/4	8 5/8	9
Shear Capacity Lbs.⊖	6600	8600	19300	34300	65000	105200	137400	137400	214700	309200	309200	420900	565800	565800

*Cylinder accessory dimensions conform to NFPA recommended standard NFPA/T3.6.8 R1-1984, NFPA recommended standard fluid power systems — cylinder — dimensions for accessories for cataloged square head industrial types. Parker adopted this standard in April, 1985. Eye Brackets or Mounting Plates shipped before this date may have different dimensions and will not necessarily interchange with the NFPA standard. For dimensional information on older style Eye Brackets or Mounting Plates consult Drawing #144805 or previous issues of this catalog.

⊖ See Accessory Load Capacity note on previous page.

•These sizes supplied with cotter pins.

†Includes Pivot Pin.

‡Consult appropriate cylinder rod end dimensions for compatibility.

For Cylinder Division Plant Locations – See Page II.

How to Order Series “2H” Cylinders

Data Required on All Cylinder Orders

When ordering Series “2H” cylinders, be sure to specify each of the following requirements:

Note: Duplicate cylinders can be ordered by giving the SERIAL NUMBER from the nameplate of the original cylinder. Factory records supply a quick, positive identification.

a) Bore

b) Mounting Style
Specify your choice of mounting style — as shown and dimensions in this catalog. If double rod is wanted, specify “with double rod”.

c) Series Designation (“2H”)

d) Length of Stroke

e) Piston Rod Diameter
Call out rod diameter or rod code number. In Series “2H” cylinders, standard rod diameters (Code No. 1) will be furnished if not otherwise specified, unless length of stroke makes the application questionable.

f) Piston Rod End Thread Style
Call out thread style number or specify dimensions. Thread style number 4 will be furnished if not otherwise specified.

g) Cushions (If required)
Specify "Cushion-head end", "Cushion-cap end" or "Cushion both ends" as required. If cylinder is to have a double rod and only one cushion is required, be sure to specify clearly which end of the cylinder is to be cushioned.

h) Alternate Lipseal® or Hi Load Piston (If desired)
Parker Lipseal® pistons are offered as an option at no extra cost in the Series “2H” cylinders. With this feature, zero leakage under static holding conditions is attained. Call out “with Lipseal® piston” if this type of piston is desired. If not specified, the ring type piston will be furnished.

i) Ports
Parker recommends SAE Straight Thread Ports for leak-proof port connections on Series “2H” hydraulic cylinders.

j) Fluid Medium
Series “2H” hydraulic cylinders are equipped with seals for use with hydraulic oil. If other than hydraulic oil will be used, specify class of fluid (see Catalog section C).

Additional data is required on orders for cylinders with special modifications. For further information, consult factory.

Class 1 Seals

Class 1 seals are the seals provided as standard in a cylinder assembly unless otherwise specified. For further information on fluid compatibility on operating limitations of all compounds, see section C.

For the 2H series cylinders the following make-up Class 1 Seals:
Primary Piston Rod Seal – Enhanced Polyurethane
Piston Rod Wiper – Nitrile
Piston Seals – Cast Iron Rings
Option – Nitrile lipseals with polymyte back-up washers
Option – Hi Load. Filled P.T.F.E. seals with a nitrile expander.
O-Rings – Nitrile (nitrile back-up washer when used)

Service Policy

On cylinders returned to the factory for repairs, it is standard policy for the Cylinder Division to make such part replacements as will put the cylinder in as good as new condition. Should the condition of the returned cylinder be such that expenses for repair would exceed the costs of a new one, you will be notified.

Address all correspondence and make shipments to, Service Department at your nearest regional plant listed in the pages of this catalog.

Certified Dimensions

Parker Cylinder Division guarantees that all cylinders ordered from this catalog will be built to dimensions shown. All dimensions are certified to be correct, and thus it is not necessary to request certified drawings.

Warranty

Seller warrants the goods sold hereunder to be free from defects in material and workmanship. This warranty shall terminate eighteen months after date of shipment from Seller’s plant and claims not made in writing within such period are waived.

The above warranty does not extend to goods damaged after date of shipment from Seller’s plant where the damage is not directly due to a defect in material or workmanship, nor does it apply to goods altered or repaired by anyone other than Seller’s authorized employees, nor to goods furnished by Buyer or acquired at Buyer‘s request and/or to Buyer’s specifications.

If the goods are in accordance with or in reference to an engineering drawing specified by or furnished to the customer, the specifications and information on the drawing shall be applicable in determining such correct use, operation and application.

When claiming a breach of warranty, Buyer must notify Seller promptly whereupon Seller will either examine the goods at their site, or issue shipping instructions for return to Seller (transportation costs prepaid by Buyer). When any goods sold hereunder are proved as not warranted, Seller’s sole obligation under this warranty shall be to repair or replace the goods, at its option, without charge to Buyer.

The above warranty comprises Seller’s sole and entire warranty obligation and liability to Buyer, its customers and assigns in connection with goods sold hereunder. All other warranties, express or implied, including but not limited to, warranties of merchantability and fitness, are expressly excluded.

For additional information – call your local Parker Cylinder Distributor.

Series "2H" Model Numbers – How to Develop Them – How to "Decode" Them

Parker Series 2H cylinders can be completely and accurately described by a model number consisting of coded symbols. For single rod cylinders a maximum of 17 places for digits and letters are used in a prescribed sequence to produce a model number. Only nine places are needed to completely describe a standard noncushioned Series 2H cylinder. To develop a model number, select only those symbols that represent the cylinder required, and place them in the sequence indicated below.

Note: Page numbers with a letter prefix, ie: C77, are located in section C of this catalog.

6" C K F P TB –2H L T V S 1 4 2 A C 12"

Feature	Description	Page No.	Symbol
Bore*	Specify in inches		
Cushion-Head	Used **only** if cushion required	C94,42 & 43	C
Double-Rod	Used **only** if double-rod cylinder is required	58	K
Mounting* Style	Head Tie Rods Extended	44	TB
	Cap Tie Rods Extended	44	TC
	Both End Tie Rods Extended	44	TD
	Head Rectangular Flange	46	J
	Head Square Flange	46	JB
	Head Rectangular	46	JJ
	Cap Rectangular Flange	48	H
	Cap Square Flange	48	HB
	Cap Rectangular	48	HH
	Side Lugs	50	C†
	Centerline Lugs	50	E
	Side Tapped	50	F†
	Side End Angles	52	CB
	Side End Lugs	52	G†
	Cap Fixed Clevis	52	BB
	Head Trunnion	54	D
	Cap Trunnion	54	DB
	Intermediate Fixed Trunnion	54	DD
	Spherical Bearing	56	SB
Mounting Modifications	Used **only** for Thrust Key (Styles C,F,G, & CB)	C93	P
	Used **only** for Manifold Port O-Ring Seal (Style C)	C91	M
Combination Mounting Style	Any Practical Mounting Style	–	As
	Listed Above	–	listed
		–	above
Series*	Used in **all** 2H Model Numbers	–	–2H
Piston	Ring packed piston standard	–	C
	Used **only** for Lipseal® Piston	43	L
	Used **only** for Hi-Load Piston	43	K
Ports*	SAE Straight Thread O-Ring Port (Standard)	C89	T
	Used **only** for NPTF (Dry Seal Pipe Thread)	C89	U
	Used **only** for BSP (Parallel Thread ISO 228)	C89	R
	Used **only** for SAE Flange Ports (3000 psi)	C89	P
	Used **only** for BSPT (Taper Thread)	C89	B
	Used **only** for Metric Thread	C89	G
	Used **only** for Metric Thread per ISO 6149	C89	Y
Common Modifications	High Water Content Fluid	C83	J
	Nut Retained Piston	43	F
	Viton Seals	C83	V
	Water Service	C83	W
	EPR Seals	C83	X
Special Modifications	Used **only** if special Modifications are required: Oversize Ports	C91	S
	Port Position Change	C89	
	Special Seals	C83	
	Stop Tube	C95	
	Stroke Adjuster	C93	
	Tie Rod Supports	C93	
Piston Rod* Number	For Single Rod Cylinders, select one only.	–	1
	Refer to Rod number listing, Table 2,	–	2
	Pages 44 through 55	–	3
	See chart in Section C for minimum piston rod	–	4
	diameter	–	5
		–	6
		–	7
		–	8
		–	9
		–	0
Piston* Rod End	Select:		
	Style 4 Small Male	C92	4
	Style 8 Intermediate Male	C92	8
	Style 9 Short Female	C92	9
	Style 3 Special (Specify)	C92	3
Piston Rod Alternate Thds.	Used **only** for stud two times longer than standard.	C92	2
Piston Rod* Threads	UNF Standard	C92	A
	BSF (British Fine)	C92	W
	Metric	C92	M
Cushion-Cap	Used **only** if cushion required	C94, 42 & 43	C
Stroke*	Specify in inches	C93	–

Use Symbol S to designate special Modification except piston rod end

Styles 4, 8 and 9 are catalog standards. Specify Style 3 for any special piston rod end

Double Rod Cylinders

For double rod cylinders, specify rod number and rod end symbols for both piston rods. A typical double rod model number would be:

6" KJ-2HU14A/14AX12"

*Required for Basic Cylinder Model Number

Dark Arrows Indicate Basic Minimum Model Number †Cylinders with these mounting styles should have a minimum stroke length equal to or greater than their bore size.

For Cylinder Division Plant Locations – See Page II.

Parker TS-2000 seal designed to eliminate cylinder rod seal leakage.

Parker Series 2H Heavy Duty and Series 3L Medium Duty Hydraulic Cylinders with the TS-2000 seal offers positive protection against cylinder rod leakage under the most demanding applications.

The TS-2000 seal is the product of countless hours of research, development and extensive field testing and is only available on Parker Cylinders.

Based on the popular Parker Serrated Lipseal rod design, the TS-2000 incorporates the pressure-compensated, uni-directional characteristics of a U-cup with the multiple edge sealing effectiveness of compression-type stacked-packings.

The goal for the Parker team was to design a rod seal suitable for all types of applications, regardless of pressure profile. It had to be composed of a material that would not react chemically with hydraulic fluids. And it had to produce better and more reliable "dry rod" performance than the standard serrated lip-seal design in a broad range of applications.

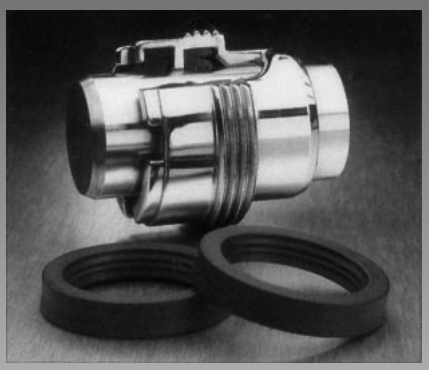

"Jewel" gland with wiperseal and TS-2000 cylinder rod seal.

The result is the TS-2000 seal, designed especially to eliminate rod seal leakage in the most demanding applications. It features a special polyurethane material that will not react chemically with petroleum-based hydraulic •uid, is extremely resistant to abrasion and extrusion, and provides exceptional service life. It has more sealing edges than other seals on the market, which in turn produces "dry rod" performance. The seal geometry was refined for maximum stability in the groove and has excellent performance characteristics throughout a broad range of pressures and piston rod velocities.

The Parker design team was successful!

TS-2000 rod seal has not failed in any of the test applications in the lab or on the job, no matter how tough or demanding.

For more information on the TS-2000 call or write your local Parker distributor or Parker Hannifin Corporation, Cylinder Division, 500 S. Wolf Road, Des Plaines, IL 60016, 847-298-2400.

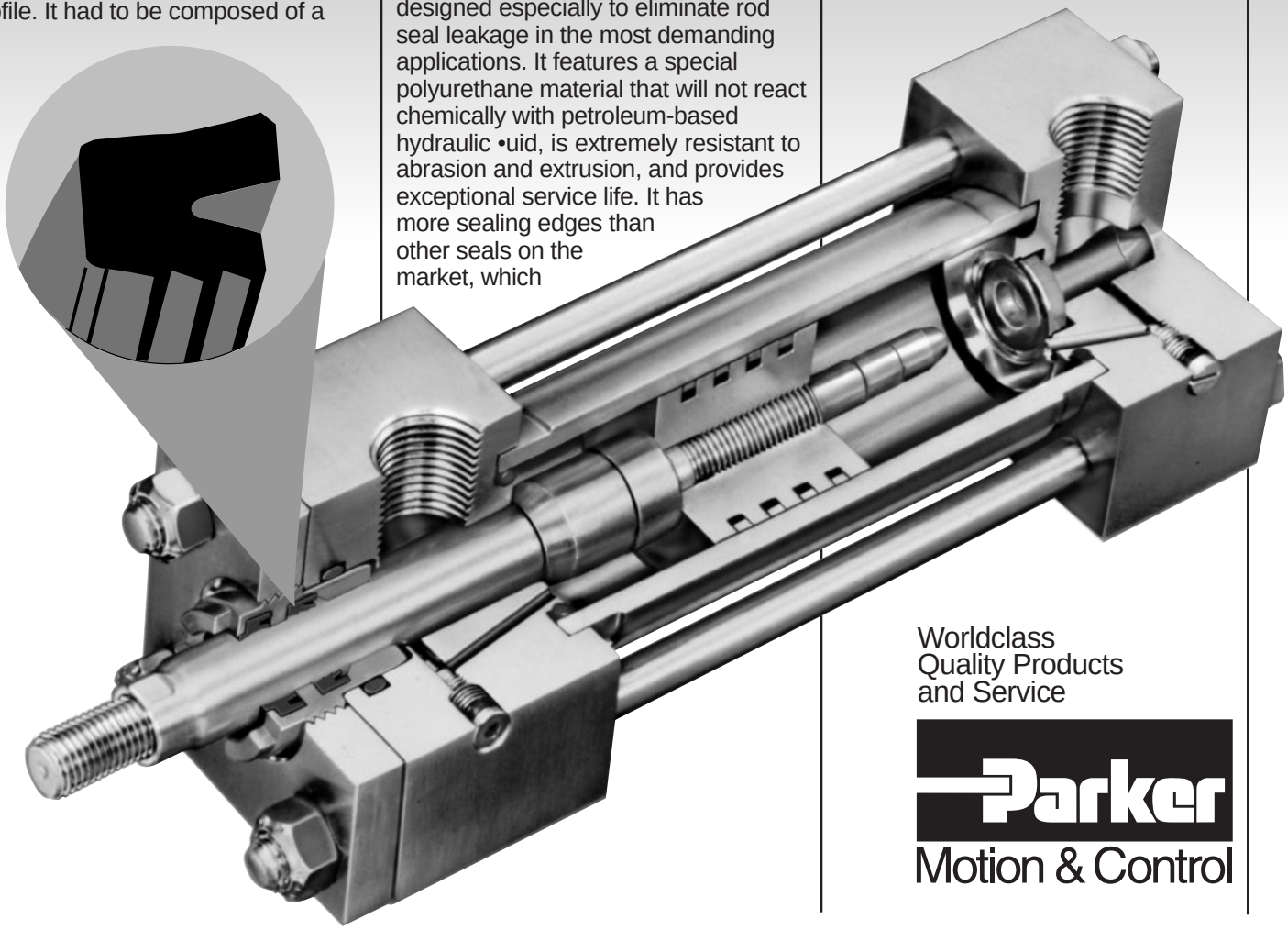

Worldclass
Quality Products
and Service

Parker
Motion & Control

For additional information – call your local
Parker Fluidpower Motion & Control Distributor.